TASCAM

TEAC Professional Division

122MKIII/ 112RMKII/112MKII

Stereo Cassette Deck

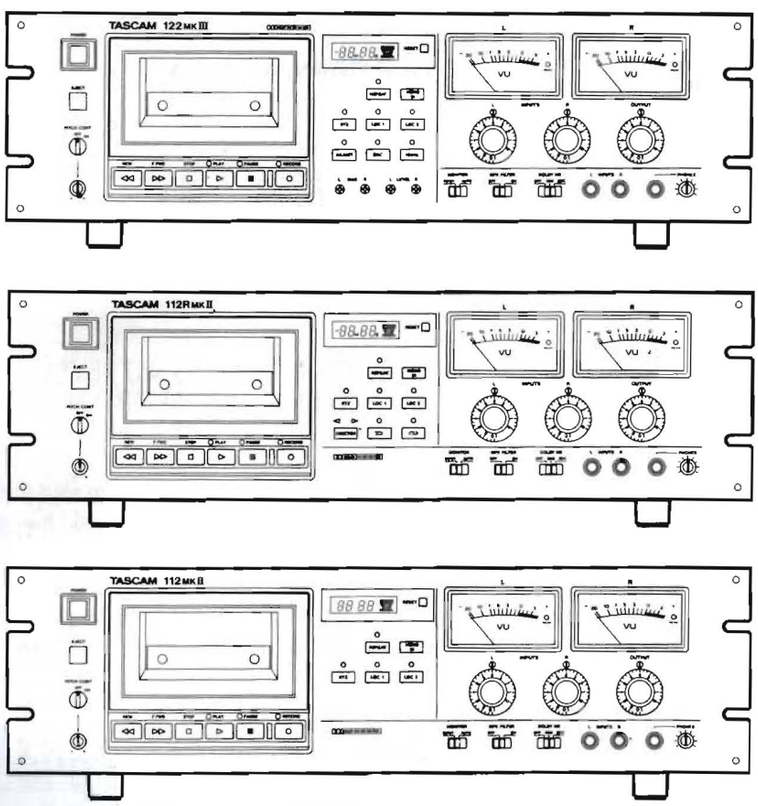

OWNER'S MANUAL

3D06932-00A

THE APPLIANCE CONFORMS WITH EEC DIRECTIVE 87/308/EEC REGARDING INTERFERENCE SUPPRESSION

CONFORME AL D.M. 13 APRILE 1989
DIRETTIVA CEE/87/308

Bescheinigung des Herstellers/Importeurs

Hiermit wird bescheinigt, daß der/die/das

Stereo Kassetten-Rekorder 122 MKIII/112R MKII/112 MKII

(Gerät, Typ, Bezeichnung)

in Übereinstimmung mit den Bestimmungen der

AMTSBLATT 163/1984, VFG 1045/1984, VFG 1046/1984

(Amtsblattverfügung)

funk-entstört ist.

Der Deutschen Bundespost wurde das Inverkehrbringen dieses Gerätes angezeigt und die Berechtigung zur Überprüfung der Serie auf Einhaltung der Bestimmungen eingeräumt.

TEAC CORPORATION

Name des Herstellers/Importeurs

Note for U.K. Customers

Due to the variety of plugs being used in the U.K., this unit is sold without an AC plug. Please request your dealer to install the correct plug to match the mains power outlet where your unit will be used as per these instructions.

IMPORTANT

The wires in this mains lead are coloured in accordance with the following code:

BLUE:	**NEUTRAL**
BROWN:	**LIVE**

As the colours of the wires in the mains lead of this apparatus may not correspond with the coloured markings identifying the terminal in your plug, proceed as follows:

The wire which is coloured blue must be connected to the terminal which is marked with the letter N or coloured BLACK. The wire which is coloured BROWN must be connected to the terminal which is marked with the letter L or coloured RED.

For CANADA

AC POWER CORD CONNECTION

CAUTION:
TO PREVENT ELECTRIC SHOCK, MATCH WIDE BLADE OF PLUG TO WIDE SLOT, FULLY INSERT.

CORDE DE CONNEXION CA

ATTENTION:
POUR ÉVITER LES CHOCS ÉLECTRIQUES, INTRODUIRE LA LAME LA PLUS LARGE DE LA FICHE DANS LA BORNE CORRESPONDANTE DE LA PRISE ET POUSSER JUSQU'AU FOND.

CAUTION
RISK OF ELECTRIC SHOCK
DO NOT OPEN

CAUTION: TO REDUCE THE RISK OF ELECTRIC SHOCK, DO NOT REMOVE COVER (OR BACK). NO USER-SERVICEABLE PARTS INSIDE. REFER SERVICING TO QUALIFIED SERVICE PERSONNEL.

The lightning flash with arrowhead symbol, within an equilateral triangle, is intended to alert the user to the presence of uninsulated "dangerous voltage" within the product's enclosure that may be of sufficient magnitude to constitute a risk of electric shock to persons.

The exclamation point within an equilateral triangle is intended to alert the user to the presence of important operating and maintenance (servicing) instructions in the literature accompanying the appliance.

This appliance has a serial number located on the rear panel. Please record the model number and serial number and retain them for your records.
Model number _____
Serial number _____

WARNING: TO PREVENT FIRE OR SHOCK HAZARD, DO NOT EXPOSE THIS APPLIANCE TO RAIN OR MOISTURE.

Introduction

This manual covers the 122 MKIII, 112R MKII, and 112 MKII.
Your new TASCAM deck is a professional rack-mount 4-track, 2-channel recorder/reproducer designed to offer outstanding audio performance and convenient features. Speed in operation is enhanced by CPS (Computomatic Program Search) (112R MKII only), 2-point Autolocator, and Return-to-zero. Dolby* HX Pro is provided to improve high frequency response. The bias is automatically set to its optimum value for each tape in use (except for the 122 MKIII). With the 122 MKIII, a built-in oscillator (400 Hz and 10 kHz) along with individual Bias and Level trimmers can be used to maximize performance with any tapes. The 3-head design of 122 MKIII and 112R MKII produces real-time, off-tape monitoring.

We suggest that you read this manual thoroughly before using the machine. Even though a quick glance will get you going, careful study will ensure that misunderstanding won't slow you down.

Table of Contents

Note for U.K. Customers 2
Safety Instructions 3
Introduction 4
Optional Accessories 4
Controls and Indicators 5-9
Basic Operation 10
Recording 10
Playback 10
Erasing a tape 10
Special Features 11-14
Autolocator functions 11
Repeat play 12
Recording a blank space between programs 13
Using CPS (Computomatic Program Search) (112R MKII only) 13
Bias and Recording Level Calibration (122 MKIII only) 15
Dolby HX PRO 16
Care and Maintenance 16
Specifications 17-18
Block Diagrams 19-20

* Dolby noise reduction and HX PRO headroom extension manufactured under license from Dolby Laboratories Licensing Corporation. HX PRO originated by Bang and Olufsen. "Dolby", the double-D symbol "DD" and "HX PRO" are trademarks of Dolby Laboratiries Lisensing Corporation.

Optional Accessories

- **RC-134 Remote Control Unit (for 122 MKIII/112 MKII)**

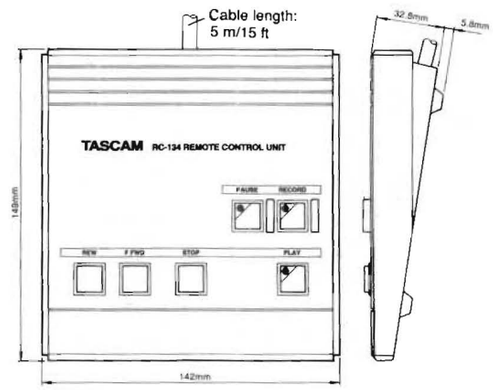

- **RC-112R Remote Control Unit (for 112R MKII)**

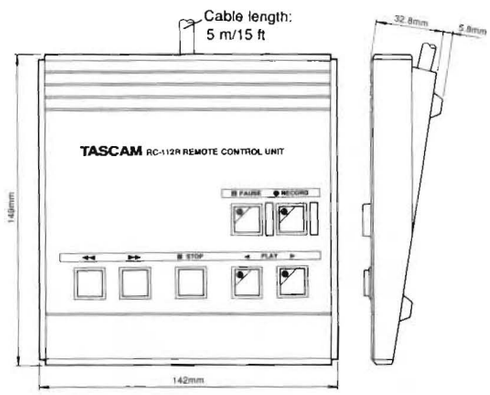

- **LA-112 Balanced Amp/Connector Kit (for 112 MKII/112 RMKII)**

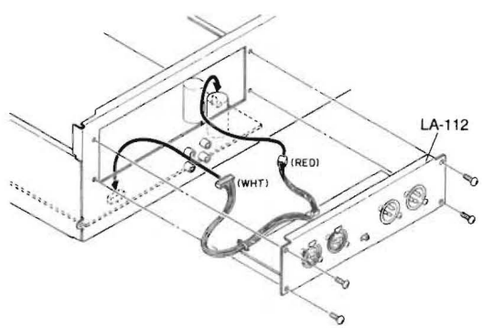

- **PB-32 Series Patch Bay**
- **Head Demagnetizer**
- **HC-1 Head Cleaner & RC-1 Rubber Cleaner (U.S. Only)**
- **TZ-261 Cleaning Kit (Except U.S.)**

Controls and Indicators

122MKIII

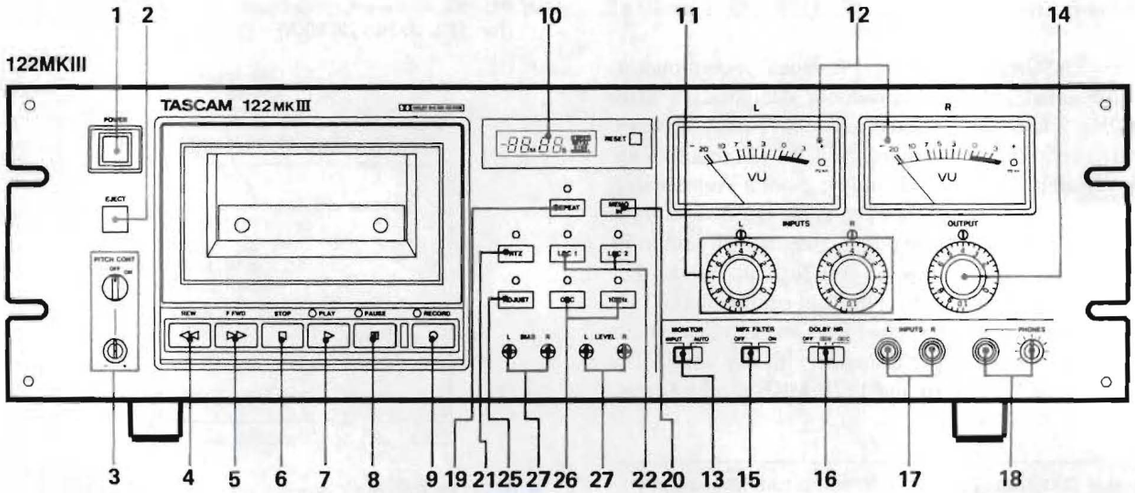

112RMKII

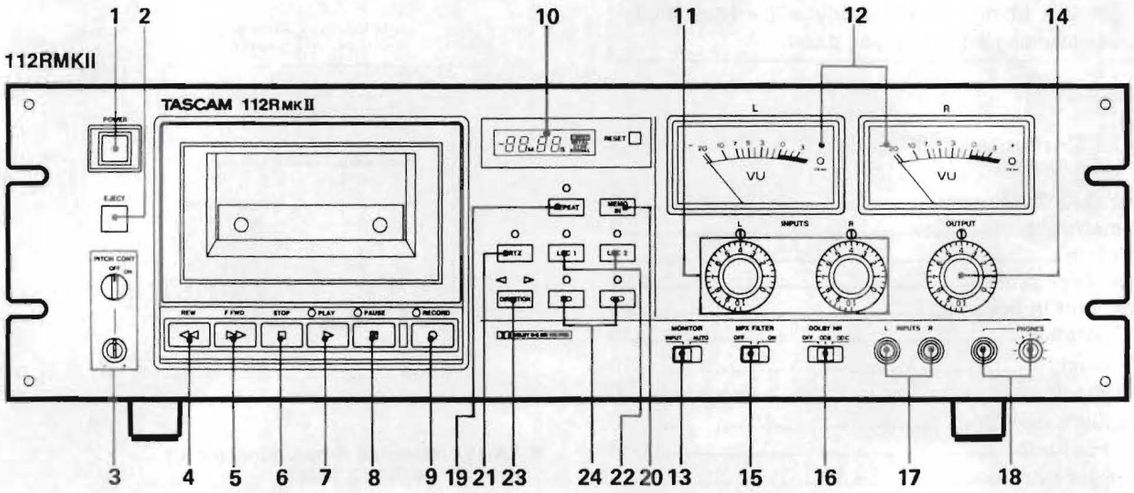

112MKII

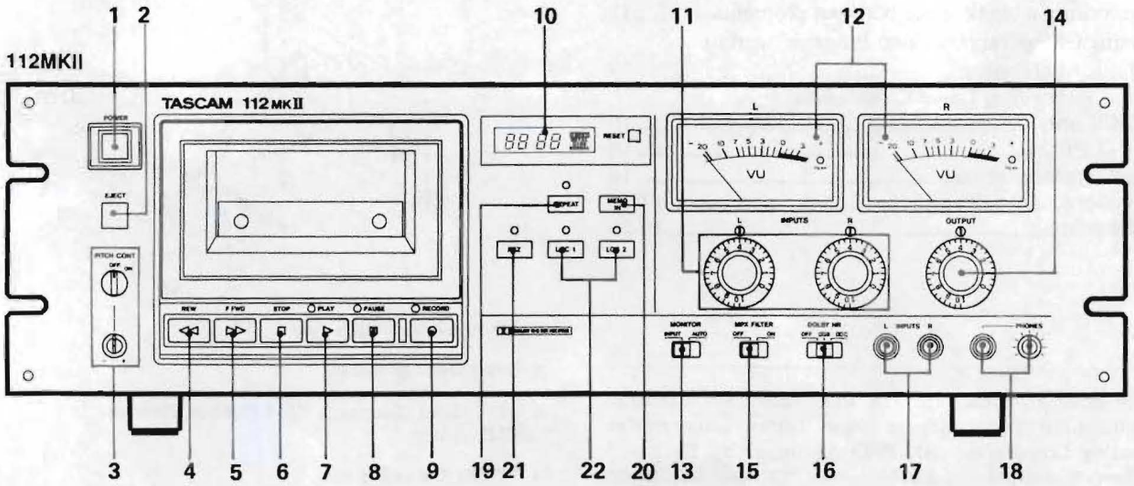

1. POWER : Switches power on to the unit.

Each time you turn on the deck, the last on/off status of the ADJUST switch (122 MKIII only) and Auto Reverse (⊂⊃ / ⊃) switch (112R MKII only) and the last play/record direction as set with the DIRECTION switch (112R MKII only) are retrieved from a backup memory.

2. EJECT : Opens the cassette compartment.

3. PITCH CONT : Provides about a plus or minus 12 % variation to the tape speed in both Play and Record modes. Unless you use the function intentionally, make sure that the knob is at its OFF position for the tape to roll at normal speed (1-7/8 i.p.s. or 4.8 cm/sec.).

4. REW : Winds the tape at high speed in reverse. If pressed during Play Pause, enables reverse cueing.

5. F.FWD : Winds the tape at high speed in the forward direction. If pressed during Play Pause, enables the forward cueing.

6. STOP : Stops all tape motion.

7. PLAY : Starts playback. If pressed together with RECORD, starts recording. If pressed during Record Pause, resumes recording.

8. PAUSE : Temporarily stops play or recording ; to resume the function interrupted, press PLAY. If pressed together with RECORD, activates Record Ready mode, allowing you to start recording by pressing PLAY only.

9. RECORD : Starts recording when pressed together with PLAY.

10. Tape Counter : Displays the distance from a zero reference point, selected by pressing RESET (-99 M 59 S to 99 M 59 S with the 122 MKIII and 112R MKII ; or 00 00 to 99 99 with the 112 MKII).

A **type of tape** in use (NORMAL, CrO2 or METAL) is indicated on the right hand side of the tape counter, and the **monitor source** too—"INPUT" lights unless tape signal is feeding the front PHONES and rear OUTPUT.

NOTE

122 MKIII and 112R MKII : The tape counter is not a clock. Its reading depends on the tape length, relative tape packs on both reels and other mechanical factors. Use a watch to measure the correct length of particular program.

Discrepancy between measurements on the tape counter and a clock (from beginning to end, one-way run) :

	Normal/CrO2	Metal
C-30	+3 min. 00 sec. to 4 min. 00 sec.	—
C-46	+1 min.30 sec. to 2 min.45 sec.	+2 min.00 sec.to 3 min.15 sec.
C-60	–45 sec. to +30 sec.	0 min.00 sec. to +1 min.15 sec.
C-90	–1 min.30 sec. to –30 sec.	–1 min.15 sec. to 0 min. 00 sec.

C-30/46 measurements made with narrow hub cassettes.

11. INPUTS, L and R : Allow individual control of both channel levels.

122 MKIII : Both controls are geared together to allow simultaneous adjustment of the record level of both channels. Each channel can be adjusted independently by holding one knob and turning the other.

12. VU meters : Indicate input or tape signal levels depending on the transport mode and the MONITOR switch setting.

13. MONITOR : Setting to INPUT routes the input signal to the PHONES and OUTPUT jacks, whatever the transport mode. If set to AUTO, the input signal can be monitored in Record Pause (Ready) mode, and the tape signal while recording (off-tape monitoring) or playing. The VU meters also switch the same way.

The 112 MKII does not provide off-tape monitoring ; you'll hear the input signal instead while recording is taking place.

14. OUTPUT : Adjusts the signal level sent to the OUTPUT jacks on the rear panel.

SAFETY INSTRUCTIONS

CAUTION:

- **Read all of these instructions.**
- **Save these instructions for later use.**
- **Follow all warnings and instructions marked on the audio equipment.**

1. **Read Instructions** – All the safety and operating instructions should be read before the appliance is operated.
2. **Retain Instructions** – The safety and operating instructions should be retained for ıuture reference.
3. **Heed Warnings** – All warnings on the appliance and in the operating instructions should be adhered to.
4. **Follow Instructions** – All operating and use instructions should be followed.
5. **Water and Moisture** – The appliance should not be used near water – for example, near a bathtub, washbowl, kitchen sink, laundry tub, in a wet basement, or near a swimming pool, etc.
6. **Carts and Stands** – The appliance should be used only with a cart or stand that is recommended by the manufacturer.

6A. An appliance and cart combination should be moved with care. Quick stops, excessive force, and uneven surfaces may cause the appliance and cart combination to overturn.

7. **Wall or Ceiling Mounting** – The appliance should be mounted to a wall or ceiling only as recommended by the manufacturer.
8. **Ventilation** – The appliance should be situated so that its location or position does not interfere with its proper ventilation. For example, the appliance should not be situated on a bed, sofa, rug, or similar surface that may block the ventilation openings; or, placed in a built-in installation, such as a bookcase or cabinet that may impede the flow of air through the ventilation openings.
9. **Heat** – The appliance should be situated away from heat sources such as radiators, heat registers, stoves, or other appliances (including amplifiers) that produce heat.
10. **Power Sources** – The appliance should be connected to a power supply only of the type described in the operating instructions or as marked on the appliance.
11. **Grounding or Polarization** – The precautions that should be taken so that the grounding or polarization means of an appliance is not defeated.
12. **Power-Cord Protection** – Power-supply cords should be routed so that they are not likely to be walked on or pinched by items placed upon or against them, paying particular attention to cords at plugs, convenience receptacles, and the point where they exit from the appliance.
13. **Cleaning** – The appliance should be cleaned only as recommended by the manufacturer.
14. **Power Lines** – An outdoor antenna should be located away from power lines.
15. **Outdoor Antenna Grounding** – If an outside antenna is connected to the receiver, be sure the antenna system is grounded so as to provide some protection against voltage surges and built up static charges. Section 810 of the National Electrical Code, ANSI/NFPA No. 70 – 1984, provides information with respect to proper grounding of the mast and supporting structure, grounding of the lead-in wire to an antenna discharge unit, size of grounding conductors, location of antenna-discharge unit, connection to grounding electrodes, and requirements for the grounding electrode. See Figure below.

EXAMPLE OF ANTENNA GROUNDING AS PER NATIONAL ELECTRICAL CODE

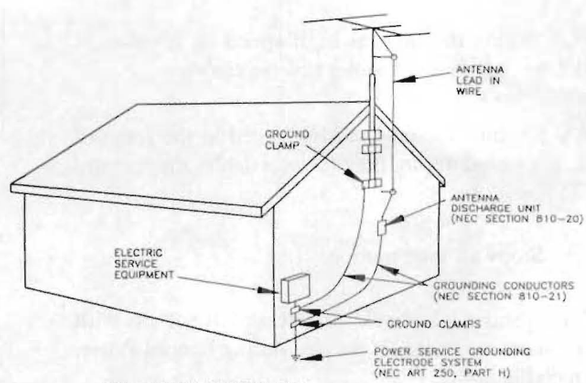

16. **Nonuse Periods** – The power cord of the appliance should be unplugged from the outlet when left unused for a long period of time.
17. **Object and Liquid Entry** – Care should be taken so that objects do not fall and liquids are not spilled into the enclosure through openings.
18. **Damage Requiring Service** – The appliance should be serviced by qualified service personnel when:
    A. The power-supply cord or the plug has been damaged; or
    B. Objects have fallen, or liquid has been spilled into the appliance; or
    C. The appliance has been exposed to rain; or
    D. The appliance does not appear to operate normally or exhibits a marked change in performance; or
    E. The appliance has been dropped, or the enclosure damaged.
19. **Servicing** – The user should not attempt to service the appliance beyond that described in the operating instructions. All other servicing should be referred to qualified service personnel.

15. MPX FILTER : For making Dolby recording of FM broadcasts. Without this filter, the pilot tone (19 Hz) and subcarrier note (38 kHz) contained in FM programs may "thwart" the DOLBY NR system.

16. DOLBY NR : Selects the Dolby B or C Noise Reduction system or defeats them.

17. INPUTS, L and R : These 1/4" jacks accept unbalanced line-level signals.

> **NOTE**
>
> Connecting signals to the front input jacks defeats the rear input jacks. You cannot use both jacks at one time.

18. PHONES : The knob adjusts the listening level in the headphones plugged into the adjacent jack.

19. REPEAT : Initiates repeat play between Memo 1 and Memo 2 (p.12)

20. MEMO IN : If pressed together with LOC 1 or 2, stores the current tape point into memory.

☞ *MEMO IN cannot operate during repeat play or when the tape is fast-winding as a result of pressing either LOC.*

21. RTZ : Fast-winds the tape at either direction, stopping when the tape counter reads 00 00. Inertia may carry the tape slightly past the 00 00 point.

22. LOC, 1 and 2 : Locate the tape to Memo 1 and Memo 2 points, respectively.

23. DIRECTION (112R MKII only) : Switches over the tape side to play or record.

☞ *DIRECTION cannot operate during :*
- *Repeat play*
- *Search with LOC or CPS*
- *Fast cueing*
- *4-second blank recording*

☞ *If pressed while in F.FWD or REW, switches the tape side to play (or record) only when the tape reaches the end or beginning or when stop is pressed.*

24. Auto Reverse (112R MKII only) : In one-time, auto-reverse mode (⇄), both sides of the tape play or record and stop. But, if play or record starts on the reverse tape side, only that tape side plays or records and stops.

In continuous reverse mode (⟲), the entire tape plays up to five times and stops, or both sides of the tape record and stop.

25. ADJUST (122 MKIII only) : If pressed when MONITOR is set to AUTO and the transport is in Record mode, allows you to press the OSC and 10 kHz switches and to "fine tune" the BIAS and LEVEL settings. For more details, see page 15.

26. OSC and 10 kHz (122 MKIII only) : Pressing OSC after ADJUST allows you to get 400 Hz or 10 kHz oscillator signals for BIAS and LEVEL adjustments (you get a 400 Hz signal unless you press the 10 kHz switch).

27. BIAS/LEVEL trimmers (122 MKIII only) : For precise calibration of the bias/record levels to the tape being used.

❑ The Rear Panel

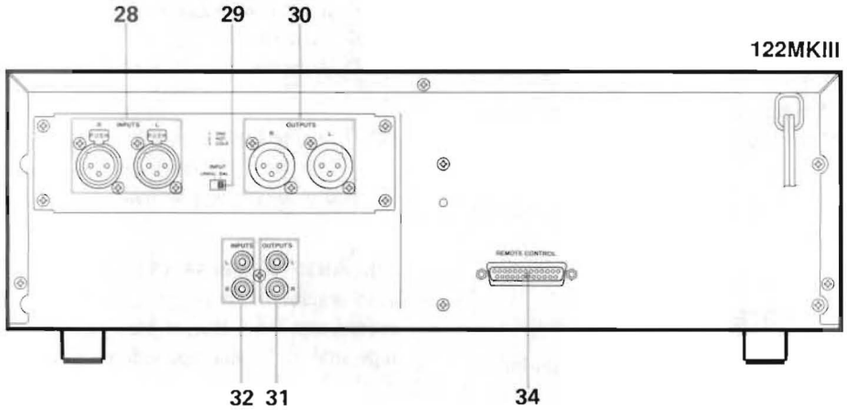

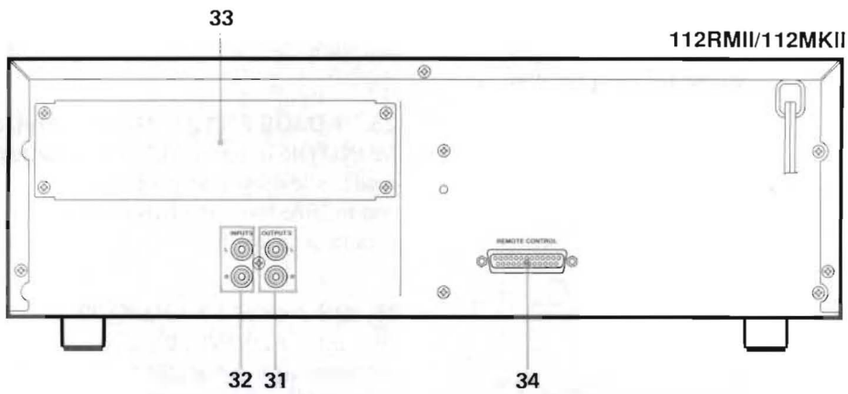

28. INPUT XLR-type jacks : Accept +4 dBm balanced signals. Pin assignment : Pin 1 is shield (ground), Pin 2 is Hot (+), and Pin 3 is Cold (-).

29. INPUT UNBAL/BAL switch : Selects either the XLR-type or RCA input jacks.

30. OUTPUT XLR-type jacks : Transmit +4 dBm balanced signals to your mixer, monitor amp, etc. Pin assignment : Pin 1 is shield (ground), Pin 2 is Hot (+), and Pin 3 is Cold (-).

31. OUTPUT RCA jacks : Transmit -10 dBV unbalanced signals.

32. INPUT RCA jacks : Accept -10 dBV unbalanced signals.

33. Blank Panel (except 122 MKIII) : Space for mounting an optional balanced amp kit (LA-112).

When the LA-112 is installed, you who are using the 112R MKII/112 MKII will have access to the INPUT XLR-type jacks (#28), the INPUT UNBAL/BAL switch (#29) and the OUTPUT XLR-type jacks (#30) as with the 122 MKIII.

34. REMOTE CONTROL connector : This 25-pin D-sub connector is for controlling the transport from the optional remote RC-112R (for 112R MKII) or RC-134 (for 122 MKIII and 112 MKII), or for fader start from a mixer.

A 25-pin connector (Part No. 53363571-00) and its jacket (Part No. 5336358100) are optionally available.

Fader start (122 MKIII and 112 MKII only) : Pins 22 and 24 are assigned for this function. The transport will toggle Play and Pause, as depicted.

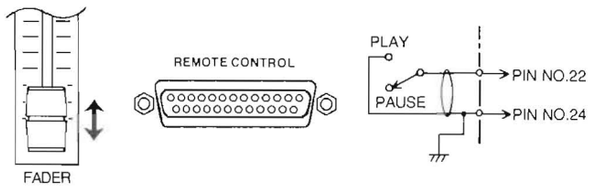

Pin	Signal	Function		
22	FADER START	Closed, Play; opened, Pause	Y	N
23	Not Used		–	–
24	GND		Y	Y
25	+ 5V	Max. 50mA	Y	Y

Y stands for Yes, N for No.
Input : To activate a function, the pin must be brought to ground potential for 24 msec or more.

REMOTE CONTROL Pin Assignment

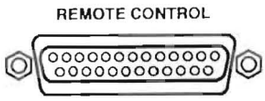

Pin	Signal	Function	112RMKII	122MKIII/112MKII
1	$\overline{\text{PLAY}}$ IN	Activates the corresponding transport mode, active at low level	Y	Y
2	$\overline{\text{FF}}$ IN	〃	Y	Y
3	$\overline{\text{REW}}$ IN	〃	Y	Y
4	$\overline{\text{PAUSE}}$ IN	〃	Y	Y
5	$\overline{\text{STOP}}$ IN	〃	Y	Y
6	$\overline{\text{REC}}$ IN	〃	Y	Y
7	$\overline{\text{START}}$ COMMAND	Lets the next deck start playing during sequential play of two decks, active at low level (only when ordered to provide the function).	N	Y
8	Not Used		–	–
9	UP/$\overline{\text{DOWN}}$ OUT	Indicates the tape travel direction (UP : forward, DOWN : rewind)	Y	Y
10	$\overline{\text{END}}$ TALLY OUT	Indicates either end of the tape is reached, active at low level.	N	Y
11	$\overline{\text{F. PLAY}}$ TALLY OUT	Indicates the corresponding mode is activated, active at low level.	Y	Y
12	$\overline{\text{FF}}$ TALLY OUT	〃	Y	Y
13	$\overline{\text{REW}}$ TALLY OUT	〃	Y	Y
14	$\overline{\text{PAUSE}}$ TALLY OUT	〃	Y	Y
15	$\overline{\text{STOP}}$ TALLY OUT	〃	Y	Y
16	$\overline{\text{REC}}$ TALLY OUT	〃	Y	Y
17	$\overline{\text{R. PLAY}}$ IN	Activates reverse side play, active at low level.	N	Y
18	$\overline{\text{R. PLAY}}$ TALLY OUT	Indicates reverse side play mode, active at low level.	N	Y
19	REEL PULSE		Y	Y
20	Not Used		–	–
21	$\overline{\text{RTZ}}$ IN	Fast-winds the tape to 00 00, active at low level.	Y	Y

Timing of Tally Outs

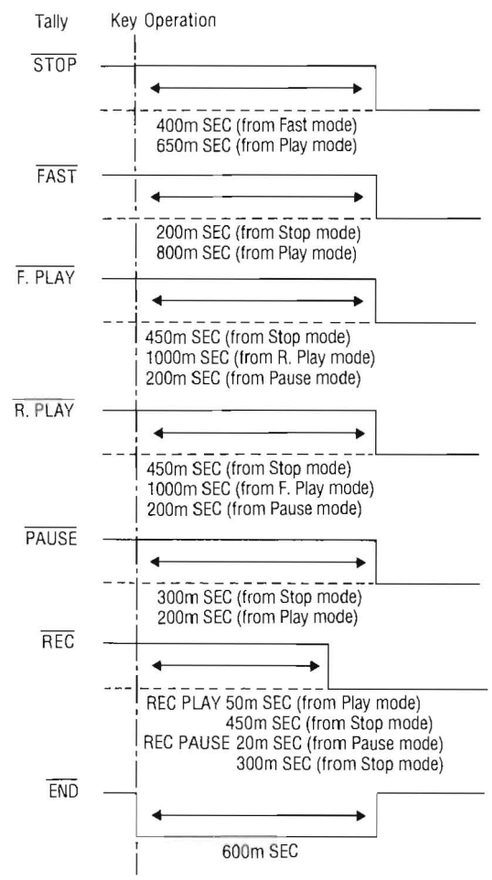

Recording

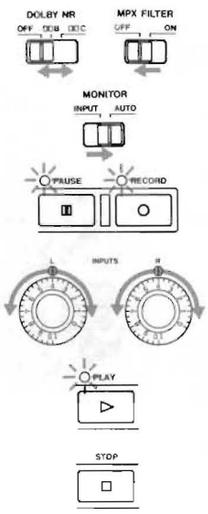

If you are using the 122 MKIII, first adjust **BIAS** and **LEVEL** as per instructions on page 15.

1. Plug the record source into the front or rear input jacks.

   If you have plugged the record source into the rear jacks, set the **INPUT** switch (on rear) to the appropriate position.

2. Set the **DOLBY NR** switch to the desired position, and the **MPX FILTER** switch to OFF unless you intend to record FM broadcasts.

3. Set the **MONITOR** select switch to AUTO.

4. Press and hold **RECORD** and press **PAUSE** to activate Record Ready mode.

5. Start your record source and adjust the **INPUT** controls so that the VU meters peak at about 0, and adjust the **PHONES** control for a comfortable listening level.

6. When everything is ready, press **PLAY** to start recording.

7. To stop recording, press **STOP**. Or press **PAUSE** to temporarily stop recording; to resume recording, press **PLAY**.

Playback

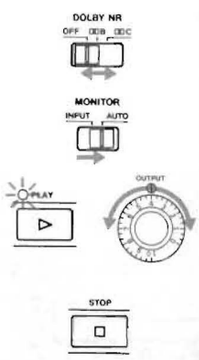

1. Set the **DOLBY NR** switch depending on the tape in use.

2. Set the **MONITOR** switch to AUTO.

3. To initiate playback, press **PLAY**.

   Adjust the **OUTPUT** and/or **PHONES** level controls as required.

4. To stop playback, press **STOP**. Or press **PAUSE** to temporarily stop playback; to resume playback, press **PLAY**.

Erasing a Tape

To erase a cassette tape not by overwriting, set the **INPUT** controls to 0 and press **RECORD** and **PLAY** together.

To quickly erase both sides of a tape (except metal tapes), use the optional TEAC E-2A Bulk Eraser.

Autolocator Functions

❑ Setting Memo 1 and Memo 2 points

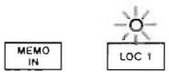

Press **MEMO IN** and **LOC** (1 or 2) together at the desired moment. The tape counter reading at that moment is stored into memory.

☞ *You cannot set any memory points during repeat play or when the tape is fast-winding as a result of pressing either LOC.*

When the tape counter is reset to 00 00, your Memo points are automatically recalculated, so that they stay the same relative to their original tape positions.

❑ Checking Memo Points

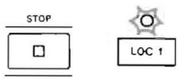

Press **STOP** and **LOC** 1/2 together and hold them. The tape counter will read the corresponding memory point until you release the buttons.

❑ Changing Memo Points

Each time you press **MEMO IN** and **LOC** 1 or 2, a new memory point is established and the previous memory point is erased.

❑ Erasing Memo points

All memory points are erased when you

- Turn off the deck, or
- Eject the tape.

❑ Locating the tape

To Memo points : Press **LOC 1** to locate the tape to the Memo 1 point, and **LOC 2** to the Memo 2 point.

Auto Play : Press **PLAY** after **LOC**. The tape will automatically start playing at the end of search operation.

Auto Pause : Press **PAUSE** after **LOC**. The transport will automatically go into Pause mode at the end of search operation.

To 00 00 : Press **RTZ**.

Repeat Play

A repeat function continually plays a segment between two memory points.

1. Mark the desired start point with **MEMO IN** and **LOC 1**, and the end of the segment you want to repeat with the **MEMO IN** and **LOC 2**.

2. Press **REPEAT**.

   The tape will be located to the Memo 1 point and start playing, automatically. When it plays up to the Memo 2 point, it will again rewind to the Memo 1 point to resume playback.

- **To exit the repeat mode**, press **REPEAT** again.

☞ *REPEAT is locked out during Record or Record Pause (Ready).*

■ 122 MKIII/112 MKII : The Memo 1 point does NOT have to be higher than the Memo 2 point. The tape will play to the higher Memo point on the tape, rewind to the lower Memo point.

■ 112R MKII : The tape always plays to the Memo 2 point and rewinds to the Memo 1 point : Memo 2 should be higher than Memo 1.

■ If you press LOC 1/2 during repeat play, the tape will be located to the Memo 1/2 point and start playing or rewind to the lower Memo point.

■ If you press a transport control, the function pressed is activated and the repeat play mode is temporarily disabled; and the repeat sequence will resume when you

- o Press LOC 1 or 2, or
- o Press PLAY when you are somewhere inside the programed loop or at a point lower than the start point of loop.

112R MKII : **To create a repeat loop over both tape sides**, use the continuous reverse mode (⊂⊃) :

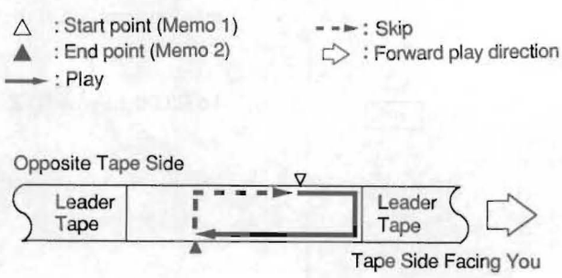

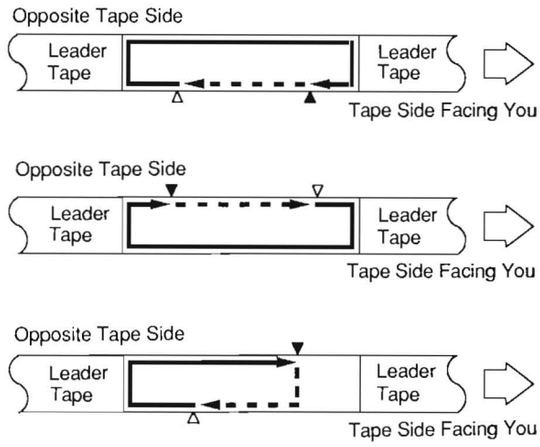

Only the last example can either be in one-time, auto-reverse or continuous reverse mode.

Recording a Blank Space Between Programs

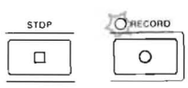

Pressing **STOP** while holding **RECORD** down during Record records 4 seconds of silence, and the tape stops.

☞ *When a 4-second blank space is recording, all controls are locked out except :*

STOP, RESET, MEMO IN, , (112R MKII only), and ADJUST (122 MKIII only)

☞ *122 MKIII : If the OSC LED is lit when you press STOP and RECORD, the deck only goes into Stop mode.*

Using CPS (Computomatic Program Search) (112R MKII only)

CPS counts a blank space of about 4 seconds between selections (programs) to locate the beginning of a specific one, letting the tape start playing after the search operation.

1. When the tape is stopped, press **STOP** and **MEMO IN** simultaneously. The CPS mode is activated and the tape counter displays "1."

   Pressing STOP and MEMO IN in other transport modes than stop, too, activates the CPS mode, the transport going into stop.

2. Specify how many selections from the current tape location is the desired selection by pressing **MEMO IN** as many times as necessary. Each time you press MEMO IN the number in the tape counter window will increment. You can enter up to 15.

   You can hold MEMO IN to scroll up the numbers.

3. Depending on whether your selection is ahead or behind the current tape location, press **F.FWD** or **REW**.

4. Each time a blank space of about 4 seconds is encountered, the tape counter display will decrement, and at the end of search operation, the tape will automatically start playing.

■ Before pressing F.FWD or REW in step 3 if any of the following is pressed, the function pressed is activated and the CPS mode is disabled :

- o Transport controls except F.FWD and REW
- o RTZ
- o LOC 1/2
- o REPEAT

■ If you press F.FWD or REW after once search starts, the function pressed is activated and the CPS mode is disabled.

■ In continuous reverse mode (⊂⊃), you can skip to a selection on either tape side.

In once-through reverse mode (⊃), you can skip from the tape side facing you to a selection on the reverse tape side, but you cannot skip from the reverse tape side to a selection on the tape side facing you ; the tape will stop when either end of the reverse tape side is reached.

High speed cueing functions (#4 and 5, page 6): Depending on some conditions such as type of tape in use, environmental temperature and humidity, etc. reverse cueing may not possibly start, or may start but not smoothly, if the current tape location is close to the beginning of the tape. Similarly, the forward cueing may not possibly start as expected if attempted near the end of the tape.

Bias and Recording Level Calibration (122 MKIII only)

Tapes differ considerably in the bias required to record on them and in their sensitivity. The 122 MKIII allows fine adjustment of bias to exactly match the tape being used ; also the reference recording level can be precisely adjusted to compensate for difference in sensitivity among tapes.

- Before starting adjustment, clean the heads, tape guides, rollers, etc. and demagnetize the heads and all metal parts in the tape path.
- In you intend to make adjustment while monitoring through speakers, turn down their volume to avoid damage to them.
- Have at hand a crisscross screwdriver which fits in with the BIAS/LEVEL trimmers.

1. Load the tape.
2. Make the following settings :

   INPUT level controls to 0 ;
   OUTPUT level control to 0 ;
   MONITOR switch to AUTO ;
   DOLBY NR switch to OFF ;
   MPX FILTER to OFF.

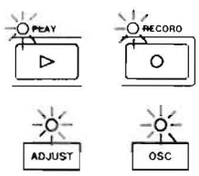

3. Press **PLAY** and **RECORD** to put the deck into Record mode.
4. Press **ADJUST**, then press **OSC.**

5. Turn the **BIAS** trimmers all the way to the left with the appropriate screwdriver.
6. Slowly turn the **BIAS** trimmers (one at time) clockwise for maximum reading on the VU meters.

   Suggestions : Turn the trimmers to the left and right alternately to "pinpoint" the exact maximum position. If the meter needles deflect all the way to the right, adjust the LEVEL trimmers until the meters read about 0 VU at a maximum setting of BIAS.

7. Adjust the **LEVEL** trimmers (one at time) for 0 VU.

8. While alternating the oscillator signal between 10 kHz and 400 Hz by pressing the **10 kHz** switch on and off (still in record mode), adjust the **BIAS** trimmers so that the VU meters show almost the same reading at both frequencies.
9. Set the oscillator to 400 Hz (10 kHz LED off) and readjust the **LEVEL** trimmers for 0 VU.

Repeat the procedure each time you change the tape, especially when you change the type of tape.

Dolby HX PRO

If the source you are recording is rich in high-frequency signals, they can adversely affect the accuracy of the recording and decrease the high-frequency response. The Dolby HX Pro system takes care of these signals during recording to prevent the accuracy of the recording from decreasing and improve the high-frequency response (by 6 dB or more).

The Dolby HX Pro system uses no encoding/decoding process and a cassette tape recorded with this system can be played back on any stereo cassette players.

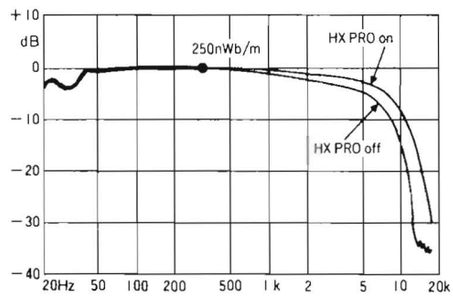

A typical example of effect of Dolby HX Pro (with Normal Tapes)

Care and Maintenance

❑ Cleaning the Heads and Tape Guides

All heads and metal parts in the tape path must be cleaned after every 6 hours of operation, or before starting and after ending a recording session.

1. Open the cassette door.
2. Using a good head cleaning fluid and a cotton swab, clean the heads and tape guides until the swab comes off clean. Wipe off any excess ceaning fluid with a dry swab.

❑ Cleaning the Pinch Roller

Clean the pinch roller at least once each day the deck is used. Use a good rubber cleancer.

1. Clean the pinch roller with a cotton swab moistened with rubber cleaner, until there is no visible residue on the pinch roller
2. Using a clean cotton swab, wipe off all excess rubber cleaner from the pinch roller. Make certain that there is no foreign matter remaining on the pinch roller.

❑ Cleaning the Capstan Shaft

After cleaning the pinch roller, clean the capstan shaft with a cotton swab moistened with head cleaning fluid.

❑ Degaussing the Tape Path

Slowly move in to the tape path. Move the degausser slowly back and forth, touching lightly all metal parts in the tape path. Slowly move it away again to at least 1 m (3 feet) from the recorder before turning if off.

122MKIII

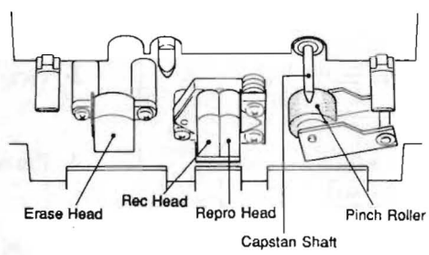

112RMKII

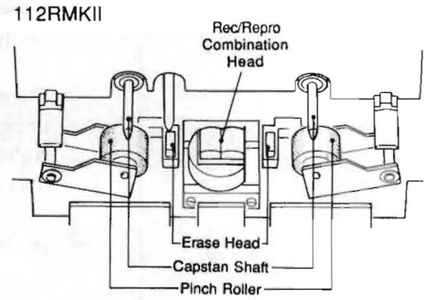

112MKII

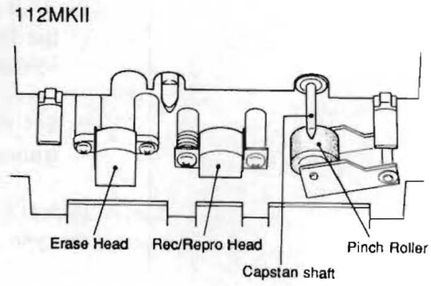

Block Diagrams

122MKIII

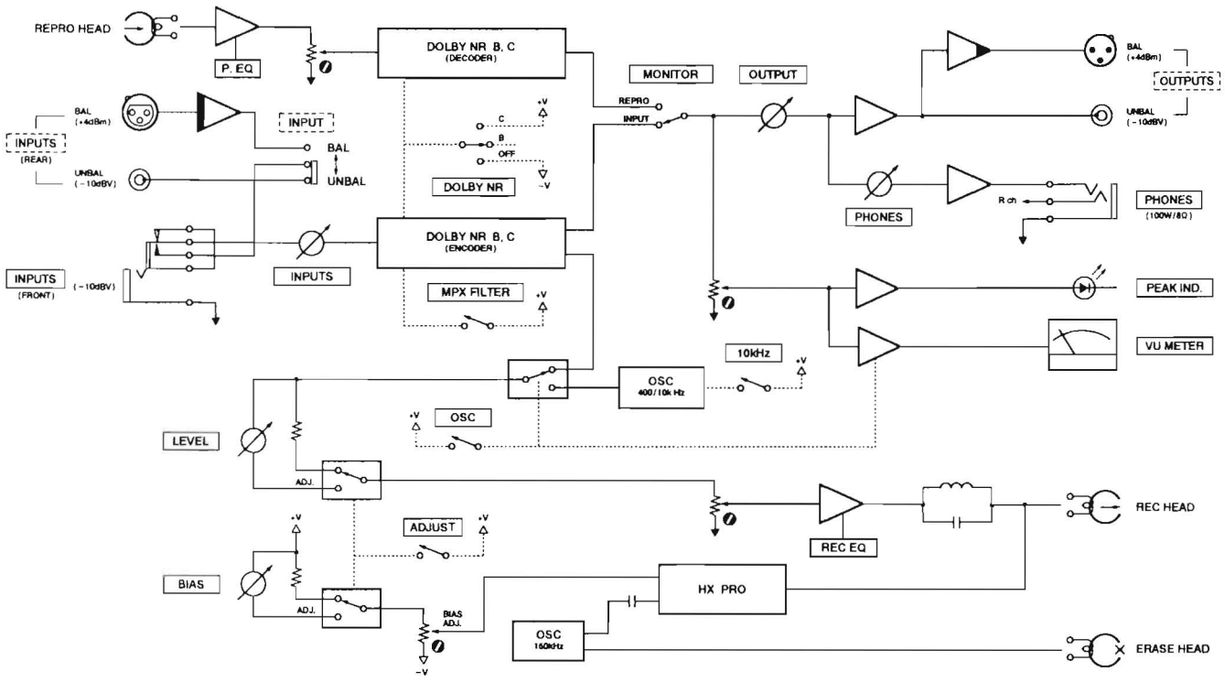

112RMKII

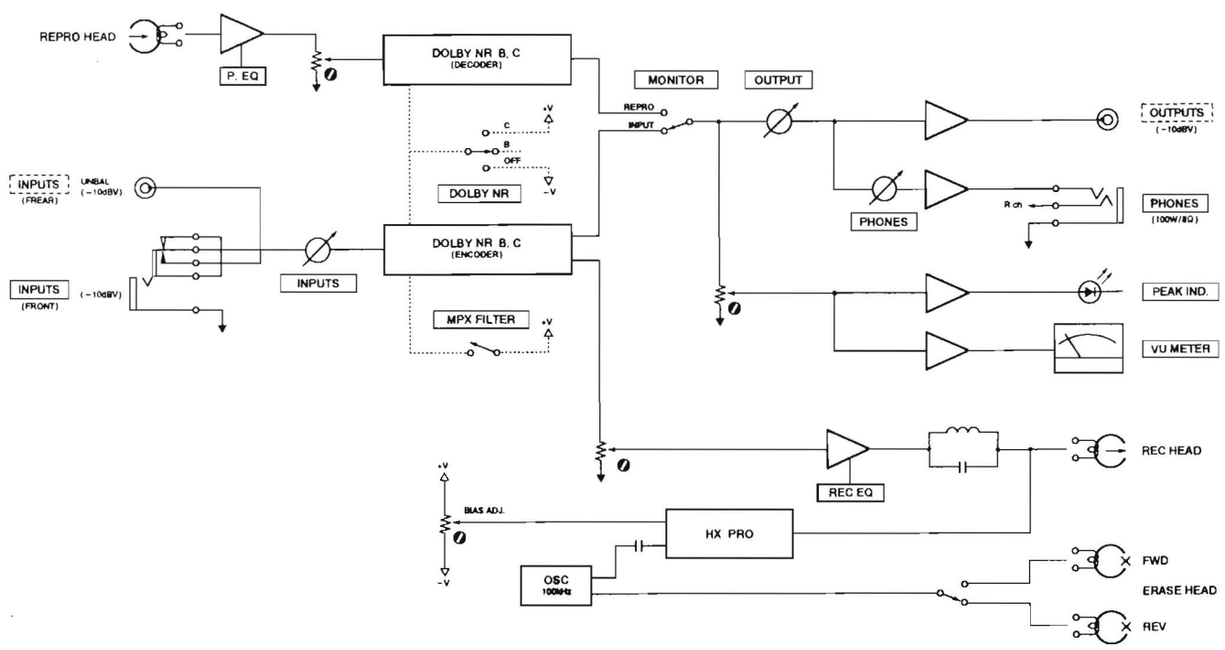

112MKII

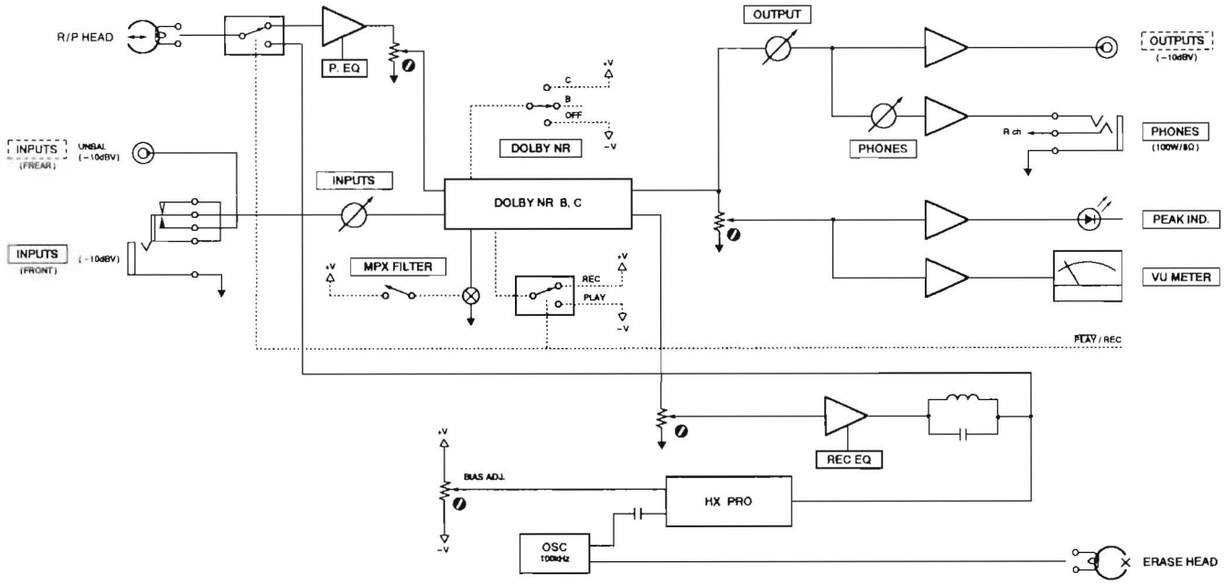

TASCAM

TEAC Professional Division

122MKIII/112RMKII/112MKII

TEAC CORPORATION	3-7-3, Nakacho, Musashino-shi, Tokyo 180, Japan Phone: (0422) 52-5081
TEAC AMERICA, INC.	7733 Telegraph Road, Montebello, California 90640 Phone: (213) 726-0303
TEAC CANADA LTD.	340 Brunel Road, Mississauga, Ontario L4Z 2C2, Canada Phone: 905-890-8008
TEAC UK LIMITED	5 Marlin House, Marlins Meadow, The Croxley Centre, Watford, Herts. WD1 8YA, U.K. Phone: 01923-819699
TEAC DEUTSCHLAND GmbH	Bahnstrasse 12, 65205 Wiesbaden-Erbenheim, Germany Phone: 0611-71580
TEAC FRANCE S.A.	17, Rue Alexis-de-Tocqueville, CE 005 92182 Antony Cedex, France Phone: (1) 42.37.01.02
TEAC NEDERLAND BV	Perkinsbaan 11, 3439 ND Nieuwegein, Nederland Phone: 03-402-30229
TEAC AUSTRALIA PTY., LTD. A.C.N. 005 408 462	106 Bay Street, Port Melbourne, Victoria 3207, Australia Phone: (03) 9644-2442
TEAC ITALIANA S.p.A.	Via C. Cantù 5, 20092 Cinisello Balsamo, Milano, Italy Phone: 02-66010500

PRINTED IN TAIWAN 0796U0.7 M-0828K

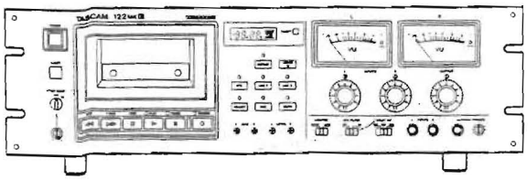

(122MKIII)

TASCAM
TEAC Professional Division

SERVICE MANUAL

122MKⅢ/112RMKⅡ/112MKⅡ

Stereo Cassette Deck

NOTES

As regards the resistors and capacitors, refer to the circuit diagrams and the PCB ass'y drawings contained in this manual.

* PCboards shown viewed from parts side.
* Parts marked with * require longer deliver time.
* ⚠Parts marked with this sign are safety critical components. They must always be replaced with identical components – refer to the TEAC Parts List and ensure exact replacement.
* Parts not shown in the parts lists, or parts, though listed, having no parts numbers, are not general "ready-to-supply" parts.

注意

標準抵抗,コンデンサーは省略してあります。回路図および基板図を参照してください。

1. プリント基板図は部品面が示されています。
2. ＊印の部品は納期が若干かかります。 あらかじめご了承ください。
3. ⚠ 印は安全規格重要部品です。 交換するときは必ずティアック指定の部品を使用してください。
4. リストされていない部品は原則としてサービス供給部品として取扱っていません。

INSTRUCTIONS FOR SERVICE PERSONNEL

BEFORE RETURNING APPLIANCE TO THE CUSTOMER, MAKE LEAKAGE-CURRENT OR RESISTANCE MEASUREMENTS TO DETERMINE THAT EXPOSED PARTS ARE ACCEPTABLY INSULATED FROM THE SUPPLY CIRCUIT.

Effective : AUGUST, 1993 4A0735

5704066600

1. SPECIFICATIONS

仕様

Tape : Compact cassette C-30 to C-90 (Normal/CrO2/Metal)

Track Format : 4-track, 2-channel

Head Configuration

122MK Ⅲ : 4-track, 2-channel
Record (x1) / repro (x1) combination head (amorphous)
Half track
Erase head (x1) (ferrite)

112RMK Ⅱ : 4-track, 2-channel
Record (x1) / repro (x1) combination rotary head (permalloy)
Half track
Erase head (x1) (ferrite)

112MK Ⅱ : 4-track, 2-channel
Record/repro head (x1) (permalloy)
Half track
Erase head (x1) (ferrite)

Motor

122MK Ⅲ : FG servo direct-drive capstan motor x1
DC servo reel motor x1
DC ancillary motor x1

112RMK Ⅱ/112MK Ⅱ : DC servo capstan motor x1
DC reel motor x1
DC ancillary motor x1

Tape Speed : 4.8 cm/sec.(1-7/8")

Pitch Control : +/-12 % (approx.)

Line Input

-Rear RCA jack/front 1/4" jack
Nominal Input Level : -10 dBV (0.3 V)
Minimum Input Level : -18 dBV (126 mV)
Input Impedance : 20k ohms, unbalanced
-XLR-type jack (standard on 122MK Ⅲ ; optional on 112RMK Ⅱ/112MK Ⅱ – LA-112 required)
Nominal Input Level : +4 dBm (1.23 V)
Input Impedance : 10k ohms, balanced

Line Output

-RCA jack (rear)
Nominal Output Level : -10 dBV (0.3 V)
Maximum Output Level : -2 dBV (0.8 V)
Output Impedance : 100 ohms
Load Impedance : 25k ohms or more
-XLR-type jack (standard on 122MK Ⅲ ; optional on 112RMK Ⅱ/112MK Ⅱ – LA-112 required)
Nominal Output Level : +4 dBm (1.23 V)
Minimum Load Impedance : 600 ohms

Headphone Output : 100 mW (8-ohm load)

Bias/Erase Frequency :

122MK Ⅲ/112RMK Ⅱ : 150 kHz
112MK Ⅱ : 100 kHz

Equalization : 3180 μs + 70 μs (CrO2/Metal)
3180 μs + 120 μs (Normal)

Reference Recording Level :

250 nWb/m = 0 VU (315 Hz) (EIAJ) ;
with Dolby : 200 nWb/m = -1 VU

Remote Connector : 25-pin D-sub

Power Requirements :

USA/Canada : 120 V AC, 60 Hz
U.K./Australia : 240 V AC, 50 Hz
Europe : 230 V AC, 50 Hz
Japan : 100 V AC, 50-60 Hz

Consumption :

122MK Ⅲ/112RMK Ⅱ : 23 W
112MK Ⅱ : 20 W

Dimensions (WxHxL) : 482 mm x 132 mm (rubber feet not included) x 356.3 mm (19" x 5-3/16" x 14")

Weight :

122MK Ⅲ/112MK Ⅱ : 8.4 kg (18-8/16 lbs.)
112RMK Ⅱ : 8.7 kg (19-3/16 lbs.)

Typical Performance

Speed Accuracy :

122MK Ⅲ : +/-0.5 %
112RMK Ⅱ/112MK Ⅱ : +/-1.0 %

Wow & Flutter 1) : less than 0.04 % WRMS

Fast Winding Time : 70 sec.(approx.) with C-60

Frequency Response, Overall 2) (EIAJ, without NR)

122MK Ⅲ : 25 Hz to 20 kHz, +/-3 dB (Metal)
25 Hz to 19 kHz, +/-3 dB (CrO2)
25 Hz to 17 kHz, +/-3 dB (Normal)

112RMK Ⅱ : 25 Hz to 19 kHz, +/-3 dB (Metal)
25 Hz to 18 kHz, +/-3 dB (CrO2)
25 Hz to 17 kHz, +/-3 db (Normal)

112MK Ⅱ : 25 Hz to 19 kHz, +/-3 dB (Metal)
25 Hz to 18 kHz, +/-3 dB (CrO2)
25 Hz to 16 kHz, +/-3 dB (Normal)

Distortion 2) : less than 1.0 %, at 1 kHz, 160 nWb/m (Metal)

S/N Ratio 2) (metal tape)

122MK Ⅲ/112RMK Ⅱ : 60 dB (without NR, ref. 3 % THD, WTD)

112MK Ⅱ : 59 dB (without NR, ref. 3 % THD, WTD)
68 dB (with Dolby-B NR, over 5 kHz)
78 dB (with Dolby-C NR, over 1 kHz)

Channel Separation 2) : 45 dB or better (1 kHz)

Erase Ratio 2) : 65 dB or better (1 kHz)

In these specifications, 0 dBV is referenced to 1 Volt, and 0 dBm is referenced to 0.775 Volt. Actual voltage levels are shown in parenthesis.

1) Measurements made with TEAC test tape MTT-111
2) Measurements made with TEAC blank test tape MTT-5571 (Metal), MTT-5562 (CrO2) and MTT-5512 (Normal).

Dolby noise reduction and HX PRO headroom extension manufactured under license from Dolby Laboratories Licensing Corporation. HX PRO originated by Band and Olufsen. "DOLBY", the double-D symbol " DD " and "HX PRO" are trademarks of Dolby Laboratories Licensing Corporation.

■ Changes in specifications and features may be made without notice or obligation.

■ この仕様は、0dBV = 1V, 0dBm = 0.775Vで表示しています。実際の電圧は（ ）で示しています。
■ 1) この項の仕様は、テスト・テープ TEAC MTT-111によります。
2) この項の仕様は、ブランク・テープ TEAC MTT-5571 (METAL), MTT-5562 (CrO2), MTT-5512 (NORMAL) によります。
■ 仕様および外観は、予告なく変更する場合があります。

＊ ドルビー・ノイズリダクション及びHXプロ・ヘッドルームエクステンションはドルビーラボラトリーズライセンシングコーポレーションからの実施権に基づき製造されています。
HXプロはバングアンドオルフセンの考案です。
＊ [ドルビー], [DD] 及び [HXプロ] はドルビーラボラトリーズライセンシングコーポレーションの登録商標です。

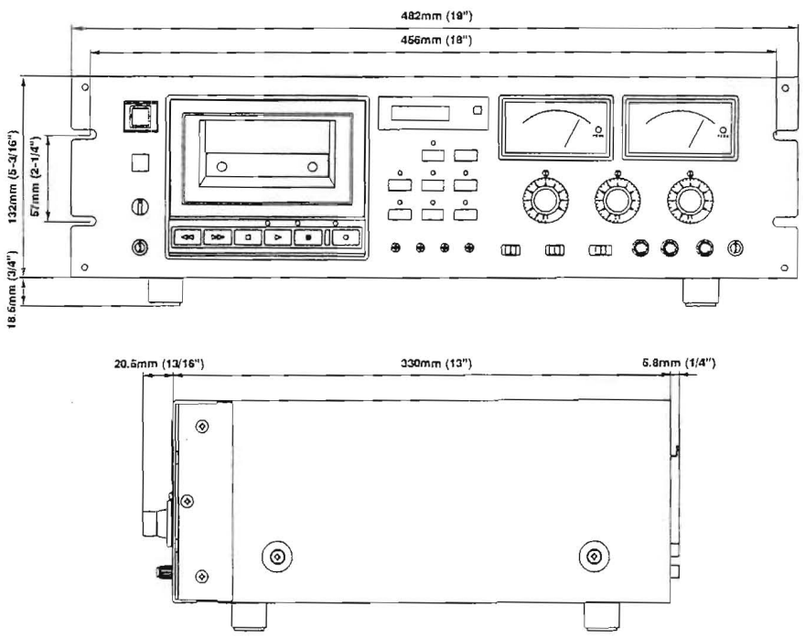

Illustration shows 122MK III. The measurements of the three models are the same.
イラストは122MK IIIのものです。 112RMK II, 112MK IIも同寸法です。

2. MECHANICAL CHECKS AND ADJUSTMENTS

機構部の確認と調整

2-1. Pinch Roller Pressure (122MK III,112RMK II,112MK II,)

1. Attach a spring scale to the pinch arm.
2. Push up the cassette switch (transport protection lever), then while holding the cassette switch up, press the PLAY button to engage the pinch roller and capstan shaft.
3. Pull the spring scale in direction indicated in Fig. 2-1 until the pinch roller fully loses contact with the capstan shaft ; then slowly ease the scale so the pinch roller moves back toward the capstan shaft.
4. Note the reading on the spring scale the moment the pinch roller again starts rotating. The scale should read 380 to 480 g.
   * Check both in FWD/PLAY (right pinch roller) and in REV/PLAY (left pinch roller) for 112RMK II.

2-1. ピンチローラ圧着力 (122MK III,112RMK II,112MK II)

1. ピンチ・アームにバネ秤を掛ける。
2. カセット・イン・スイッチ・アームを上方に押し、PLAYボタンを押して、プレイ・モードにする。測定中、スイッチ・アームは上方に押し続けること。
3. ピンチ・ローラがキャプスタン・シャフトから完全に離れるように秤を矢印の方向（図2-1）に引っ張た後、ピンチ・ローラが再びキャプスタン・シャフトに接触するように徐々に戻す。
4. ピンチ・ローラが回り始めるときの値を読む。
   * 112RMK IIは、FWD/PLAY（右ピンチ・ローラ）、REV/PLAY（左ピンチ・ローラ）共確認する。
   規格：380～480 g

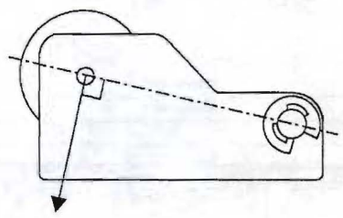

Fig. 2-1

2-2-A. Tape Positioning (122MK III)

Adjustment Tools :
- Head adjustment jig "A" : Part No. 5736006600
- Head adjustment jig "B" : Part No. 5736006700
- Erase head spacer ; 0.05mm : Part No. 5801357800
  0.1mm : Part No. 5800556200
  0.2mm : Part No. 5801197800

2-2-A. テープ走行（122MK III）

調整治具
- ヘッド調整治具A：品番 5736006600
- ヘッド調整治具B：品番 5736006700
- 消去ヘッド・スペーサ 0.05mm ：品番 5801357800
  0.1mm ：品番 5800556200
  0.2mm ：品番 5801197800

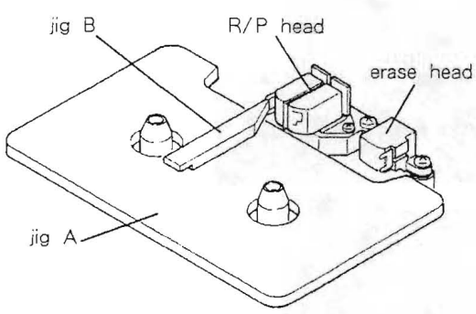

Fig. 2-2

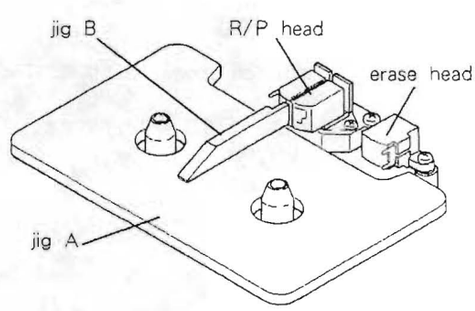

Fig. 2-3

1. Adjusting the erase head height
   1). Set jig A as shown in Fig. 2-2, then set the deck to PLAY mode.
   2). Confirm that jig B smoothly fits into the tape guide groove on the erase head.
   If it doesn't, add or remove the spacer(s) between the erase head and head base.
2. Adjusting the R/P head height
   3). As with the erase head, confirm using jig B; for adjustment, use height adjustment screw A (Fig. 2-4).
3. Adjusting the R/P head tilt
   4). As shown in Fig. 2-3, place jig B against the head in order to confirm the tilt. Perform tilt adjustment with screw B (Fig. 2-4) so that the head is at right angles with respect to jig B.
   5). If tilt adjustment screw B is adjusted, revert to 3), then confirm again.
4. Adjusting R/P head azimuth
   6). As shown in Fig. 2-5, hook up the measuring instruments.
   7). Play back the 10 kHz signal on test tape MTT-256, then adjust playback azimuth adjustment screw C (Fig. 2-4) so that the phase difference between L and R channels is 0°.
   8). If azimuth adjustment screw C is turned more 45°, revert to 3), then reconfirm.
5. Confirming the tape travel
   9). When mirror tape MTT-902 is run in PLAY mode, see that the tape is free from curl at each guide portion.
   10). If the tape is curled, fine-adjust the R/P head height using screw A [or adjust the erase head height using spacer(s)] then revert to 6) and reconfirm.

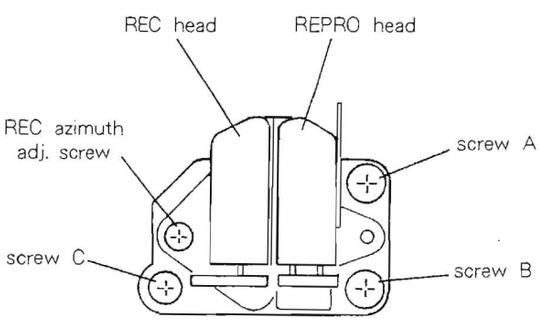

Fig. 2-4

1. 消去ヘッドの高さ調整
   1). 図2-2のように治具Aをセットし、PLAYモードにする。
   2). 治具Bが消去ヘッドのテープ・ガイド溝にスムーズに入ることを確認する。
   そうでない場合は、消去ヘッドとヘッド・ベース間にあるスペーサを追加または除去することにより調整する。
2. R/Pヘッドの高さ調整
   3). 消去ヘッドと同様に治具Bで確認し、調整は高さ調整ネジA(図2-4)により行う。
3. R/Pヘッドのチルト調整
   4). 図2-3のように治具Bをヘッドに当ててチルトを確認し、ヘッドが治具Bに対して垂直になるようにチルト調整ネジB(図2-4)で調整する。
   5). チルト調整ネジBを調整した場合は、3)項に戻りそれ以降を再度確認する。
4. R/Pヘッドのアジマス調整
   6). 図2-5のように測定器を接続する。
   7). テスト・テープMTT-256の10kHzを再生して、LchとRchの位相差が0°になるように再生アジマス調整ネジC(図2-4)で調整する。
   8). アジマス調整ネジCを45°以上回転させた場合は、3)項に戻りそれ以降を再度確認する。
5. テープ走行の確認
   9). PLAYモードでミラー・テープMTT-902を走行させたとき、各ガイド部でテープのカールが無いことを確認する。
   10). カールしている場合は、R/Pヘッドの高さをネジAで微調整(または消去ヘッドの高さをスペーサで調整)した後、6)項に戻りそれ以降を再度確認する。

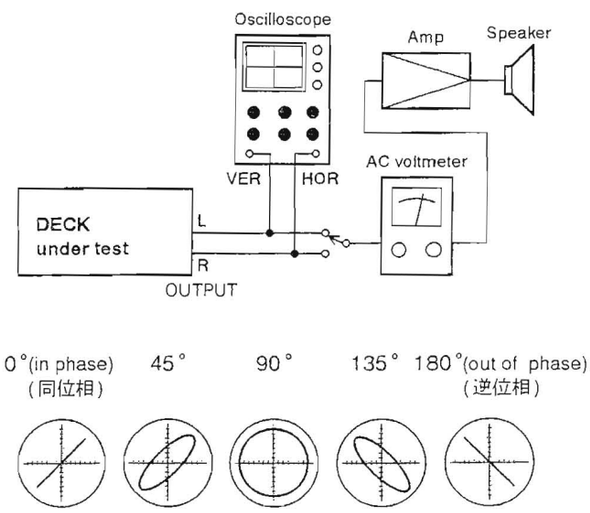

Fig. 2-5

2-2-B. Tape Positioning (112RMK II)

Adjustment Tools :
- Head adjustment jig "A" : Part No. 5736006600
- Head adjustment jig "B" : Part No. 5736006700
- R/P head spacer ; 0.05mm : Part No. 5801357700
  0.1mm : Part No. 5800595000
  0.2mm : Part No. 5800595100

2-2-B. テープ走行（112RMK II）

調整治具
- ヘッド調整治具A：品番 5736006600
- ヘッド調整治具B：品番 5736006700
- R/Pヘッド・スペーサ 0.05mm ：品番 5801357700
  0.1mm ：品番 5800595000
  0.2mm ：品番 5800595100

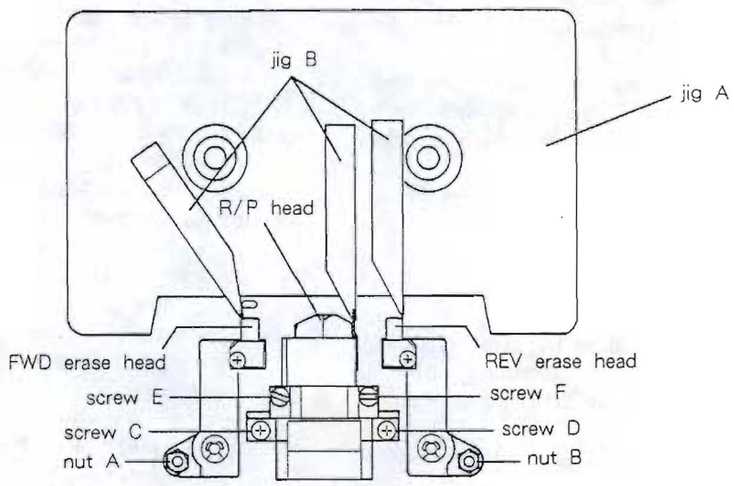

Fig. 2-6

1. Adjusting the erase head height
   1). Set jig A as shown in Fig. 2-6, then set the deck to FWD/PLAY mode.
   2). Confirm that jig B smoothly fits into the tape guide groove on the FWD erase head.
   If it doesn't, adjust Allen nut A shown in Fig. 2-6.
   3). Set the deck to REV/PLAY mode, and in a similar way, adjust the REV erase head using Allen nut B.
   4). After adjustment is complete, repeat FWD/PLAY, and REV/PLAY for reconfirmation.
2. Adjusting the R/P head height
   5). As in the confirmation of the erase head height, confirm the R/P head height in FWD/PLAY and REV/PLAY modes using jig B.
   - If the head is both high (or low) in FWD and REV modes, replace the spacer under screws C and D (Fig. 2-6) with a thin (or thick) one. (Add or remove the same number of spacers with the same thickness for both screws C and D.)
   - If jig B smoothly fits into the guide groove in both FWD and REV modes, or the height is opposite (example : high in FWD mode and low in REW mode), it should be deemed acceptable.

1. 消去ヘッドの高さ調整
   1). 図2-6のように治具Aをセットし、FWD/PLAYモードにする。
   2). 治具BがFWD用消去ヘッドのテープ・ガイド溝にスムーズに入ることを確認する。
   そうでない場合は、図2-6の六角ナットAを調整する。
   3). REV/PLAYモードにして、同様にREV用消去ヘッドの高さを六角ナットBで調整する。
   4). 調整後、FWD/PLAY, REV/PLAYを繰り返して再度確認する。
2. R/Pヘッドの高さ調整
   5). 消去ヘッドの高さ確認と同様に、FWD/PLAY, REV/PLAYモードにおけるR/Pヘッドの高さを治具Bで確認する。
   - FWD, REVでヘッドの高さが共に高い(低い)場合
     ネジC, D (図2-6) の下のスペーサーを板厚の薄い(厚い)ものに換える。(C, D共同じ厚さのスペーサーを同枚数増減すること)
   - FWD, REV共、治具Bがガイド溝にスムーズに入る場合またはFWD, REVで高さが逆（例：FWD時高い、REW時低い）の場合はOKとする。

3. Adjusting the R/P head azimuth

6). Hook up the measuring instruments as shown in Fig. 2-5.

7). Play back the 10 kHz signal on test tape MTT-256 in FWD/PLAY mode, then adjust FWD azimuth adjustment screw E (Fig. 2-6) so that the phase difference between the L and R channels is 0°.

8). Likewise, adjust REV azimuth adjustment screw F so that the phase difference in REV/PLAY mode is 0°.

9). If azimuth adjustment screw E or F is turned more than 45°, revert to 5), then reconfirm.

10). When mirror tape MTT-902 is run in FWD/PLAY and REV/PLAY modes, see that the tape is free from curl at each guide portion. At the same time, see that the tape comes into contact with the lower guide of the R/P head during FWD mode and that the tape comes into contact with the upper guide of the R/P head during REV mode.

11). If the tape is not traveling as described above, fine-adjust Allen nuts A and B on the erase head, then revert to 6) and reconfirm.

2-2-C. Tape Positioning (112MK II)

Adjustment Tools :

- Head adjustment jig "A" : Part No. 5736006600
- Head adjustment jig "B" : Part No. 5736006700
- Erase head spacer ; 0.05mm : Part No. 5801357800
  0.1mm : Part No. 5800556200
  0.2mm : Part No. 5801197800
- R/P head spacer ; 0.05mm : Part No. 5801357700
  0.1mm : Part No. 5800595000
  0.2mm : Part No. 5800595100

1. Adjusting the erase head height

1). Set jig A as shown in Fig. 2-7, then set the deck to PLAY mode.

2). Confirm that jig B smoothly fits into the tape guide groove on the erase head.
If it doesn't, add or remove the spacer(s) between the erase head and head base.

2. Adjusting the R/P head height

3). As with the erase head, confirm using jig B, and make adjustment using spacer(s).

3. Adjusting the R/P head azimuth

4). As shown in Fig. 2-5, hook up the measuring instruments.

5). Play back the 10 kHz signal on test tape MTT-256, then adjust the azimuth adjustment screw (Fig. 2-7) so that the phase difference between the L and R channels is 0°.

6). If the azimuth adjustment screw is turned more than 45°, revert to 3), then reconfirm.

3. R/Pヘッドのアジマス調整

6). 図2-5のように測定器を接続する。

7). FWD/PLAYモードでテスト・テープ MTT-256の 10kHzを再生して、LchとRchの位相差が 0° になるようにFWD用アジマス調整ネジE（図2-6）を調整する。

8). 同様に、REV/PLAYモードで位相差が 0° になるようにREV用アジマス調整ネジFを調整する。

9). アジマス調整ネジEまたはFを45° 以上回転させた場合は、5）項に戻りそれ以降を再度確認する。

4. テープ走行の確認

10). FWD/PLAY, REV/PLAYモードでミラー・テープ MTT-902を走行させたとき、各ガイド部でテープのカールが無いことを確認する。 また、FWD時、R/Pヘッドの下のガイドに、REV時、R/Pヘッドの上のガイドにテープが当たることを確認する。

11). 上記のようにテープが走行していない場合は、消去ヘッドの六角ナットA, Bで微調整した後、6）項に戻りそれ以降を再度確認する。

2-2-C. テープ走行（112MK II）

調整治具

- ヘッド調整治具A：品番 5736006600
- ヘッド調整治具B：品番 5736006700
- 消去ヘッド・スペーサ 0.05mm ：品番 5801357800
  0.1mm ：品番 5800556200
  0.2mm ：品番 5801197800
- R/Pヘッド・スペーサ 0.05mm ：品番 5801357700
  0.1mm ：品番 5800595000
  0.2mm ：品番 5800595100

1. 消去ヘッドの高さ調整

1). 図2-7のように治具Aをセットし、PLAYモードにする。

2). 治具Bが消去ヘッドのテープ・ガイド溝にスムーズに入ることを確認する。
そうでない場合は、消去ヘッドとヘッド・ベース間にあるスペーサを追加または除去することにより調整する。

2. R/Pヘッドの高さ調整

3). 消去ヘッドと同様に治具Bで確認し、調整も消去ヘッドと同様にスペーサで行う。

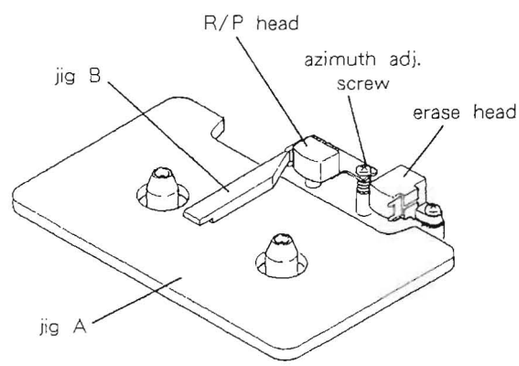

Fig. 2-7

4. Confirming the tape travel
   7). When mirror tape MTT-902 is run in PLAY mode, see that the tape is free from curl at each guide portion.
   8). If the tape is curled, adjust the erase head height using spacer(s), then revert to 4) and reconfirm.

2-3. Reel torque (122MK III, 112RMK II, 112MK II)

1. Take-up torque/back tension
   1). Set up the cassette torque meter (MTT-8111), then set the deck to PLAY mode (FWD/PLAY mode in the case of the 112RMK II) and read the value on the torque meter.(If the reading has a deflection [the pointer swings], use the center value.) The standard range is as follows :
   2). Likewise, put the cassette torque meter (MTT-8121) to the 112RMK II, then set the deck to REV/PLAY mode and read the value on the torque meter.

   Take-up torque : 25 to 65 g・cm
   Back tension : 122MK III, 112RMK II ; 6 to 10 g・cm
   112MK II ; 2 to 6 g・cm

2. F.FWD/REW torque
   Set up the cassette torque meter (MTT-8242), then measure the starting torques in F.FWD and REW operations, respectively.

   F.FWD/REW torque : 80 g・cm or more

2-4. Tape speed (122MK III, 112RMK II, 112MK II)

1. As shown in Fig. 2-8, connect the frequency counter.
2. Load the test tape MTT-111N.
3. Let the capstan motor rotate in PLAY mode, then leave it as it is for at least one minute to warm it up.
4. Set the PITCH CONT switch to OFF.
5. Play back the middle section of the test tape, then adjust trimmer resistor R1 (Fig. 2-9) on the P.CONT PCB so that the frequency counter reads 3000±5 Hz.
6. Set the PITCH CONT switch to ON, then set the PITCH CONT knob to the center.
7. Play back the middle section of the test tape, then adjust trimmer resistor R2 (Fig. 2-9) on the P.CONT PCB so that the frequency counter reads 3000±5 Hz.
8. Upon completion of adjustment, confirm that the following value is obtained at the beginning and end of the tape.

   Speed variations : 3000±45 Hz
   Fluctuation range : within 30 Hz

3. R/Pヘッドのアジマス調整
   4). 図2-5のように測定器を接続する。
   5). テスト・テープ MTT-256の10kHzを再生して、LchとRchの位相差が 0° になるようにアジマス調整ネジ (図2-7) で調整する。
   6). アジマス調整ネジを 45° 以上回転させた場合は、3) 項に戻りそれ以降を再度確認する。
4. テープ走行の確認
   7). PLAYモードでミラー・テープ MTT-902を走行させたとき、各ガイド部でテープのカールが無いことを確認する。
   8). カールしている場合は、消去ヘッドの高さをスペーサで調整した後、4) 項に戻りそれ以降を再度確認する。

2-3. リール・トルク (122MK III,112RMK II,112MK II)

1. テイクアップ・トルク/バックテンション
   1). カセット・トルク・メータ (MTT-8111) を装着し、PLAYモード (112RMK IIは、FWD/PLAYモード) にしてトルク・メータの値を読む。(振れのある場合は中心値とする) 規格値は下記の通り。
   2). 112RMK IIは、同様にカセット・トルク・メータ (MTT-8121) を装着し、REV/PLAYモードにしてトルク・メータの値を読む。

   テイクアップ・トルク : 25～65 g・cm
   バックテンション : 122MK III, 112RMK II ; 6～10 g・cm
   112MK II ; 2～ 6 g・cm

2. F.FWD/REW トルク
   カセット・トルク・メータ (MTT-8242) を装填し、F.FWD動作およびREW動作の起動トルクをそれぞれ測定する。

   F.FWD/REW トルク : 80 g・cm以上

2-4. テープ速度 (122MK III,112RMK II,112MK II)

1. 図2-8のように、周波数カウンタを接続する。
2. テスト・テープ MTT-111Nを装着する。
3. PLAYモードでキャプスタン・モータを回転させ、ウォーミングアップするために、少なくとも1分間そのままにしておく。
4. PITCH CONTスイッチをOFFにする。
5. テスト・テープの中間部を再生し、周波数カウンタの値が 3000±5 Hzになるように P.CONT PCBの半固定抵抗 R1 (図2-9) を調整する。
6. PITCH CONTスイッチをONにし、PITCH CONTつまみを中央にセットする。
7. テスト・テープの中間部を再生し、周波数カウンタの値が 3000±5 Hzになるように P.CONT PCBの半固定抵抗 R2 (図2-9) を調整する。

9. Confirm that the frequency is 2700 Hz or less when the PITCH CONT knob is set to minimum with the PITCH CONT switch ON and 3300 Hz or more when the PITCH CONT knob is set to maximum.

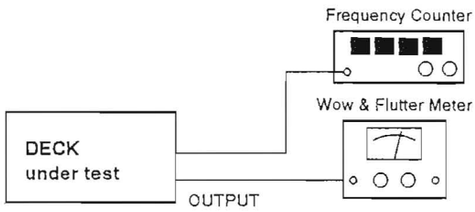

Fig. 2-8

2-5. Wow and flutter (122MK III, 112RMK II, 112MK II)

Note : Measurements should be made in PLAY mode at the beginning, middle and end of the tape, respectively. (However, avoid the first graduation on the cassette shell for the beginning and end of the tape.)

1. As shown in Fig. 2-8, connect the wow & flutter meter to the deck.
2. Play back the test tape MTT-111N.
3. Measure the wow-flutter value. The standard range is as follows :

   within 0.06% (WRMS)

2-6. Adjusting the quick reverse voltage (112RMK II)

1. Connect the DC voltmeter between TP2 (Fig. 2-10) on the CONT S PCB and GND.
2. When blank tape MTT-5512 is played back in the REV/PLAY mode, adjust R26 (Fig. 2-10) on the CONT S PCB so that the voltage at TP2 reads 2.5 V.

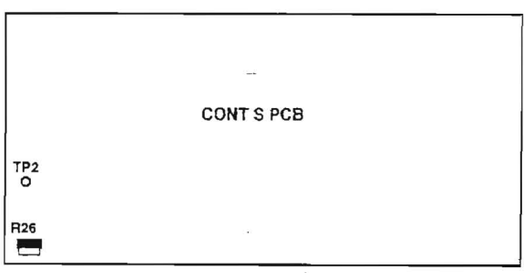

Fig. 2-10

8. 調整後、テープの巻始めと巻終わりで、下記の値が得られることを確認する。

   速度偏差 : 3000 ± 45 Hz
   変動幅 : 30 Hz以内

9. PITCH CONTスイッチONで、PITCH CONTつまみを最小にしたとき 2700Hz以下、最大にしたとき 3300Hz以上であること。

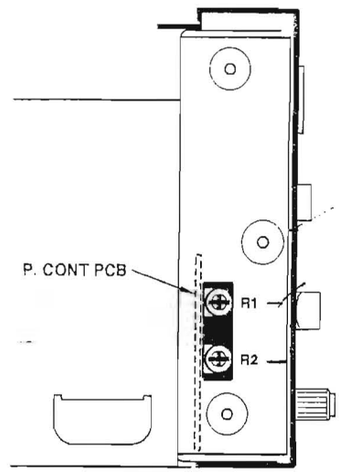

Fig. 2-9

2-5. ワウ・フラッタ (122MK III, 112RMK II, 112MK II)

注意 : 測定は再生法により、テープの巻始め、中間部、巻終わりでそれぞれ行なってください。(但し、カセット・ハーフの巻始めと巻終わりの1目盛りは除く)

1. 図2-8のように、ワウ・フラッタ・メータをデッキに接続する。
2. テスト・テープMTT-111Nを再生する。
3. ワウ・フラッタ値を測定する。規格値は次の通り。
   0.06%以内 (WRMS)

2-6. クイック・リバース電圧調整 (112RMK II)

1. CONT S PCBのTP2 (図2-10) とGND間にDC電圧計を接続する。
2. REV/PLAYモードで、ブランク・テープ MTT-5512を再生したとき、TP2の電圧が 2.5Vになるように CONT S PCBのR26 (図2-10) を調整する。

3. AMPLIFIER SECTION CHECKS AND ADJUSTMENTS

アンプ部の確認と調整

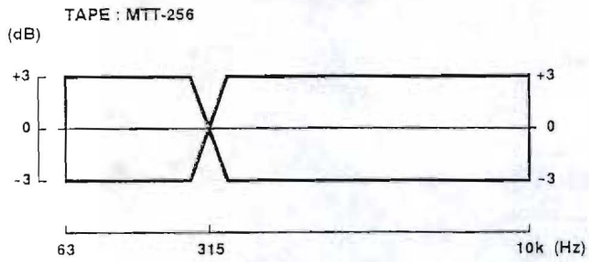

Fig. 3-1 Playback frequency

再生周波数特性

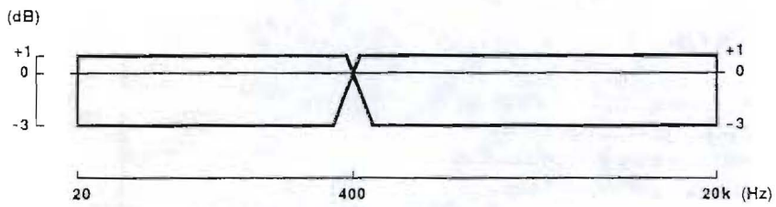

Fig. 3-2 Monitor frequency response

モニター周波数特性

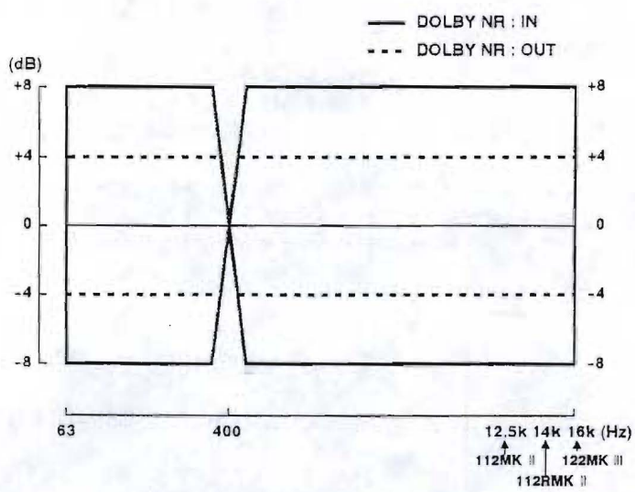

Fig. 3-3 Overall frequency response

録再周波数特性

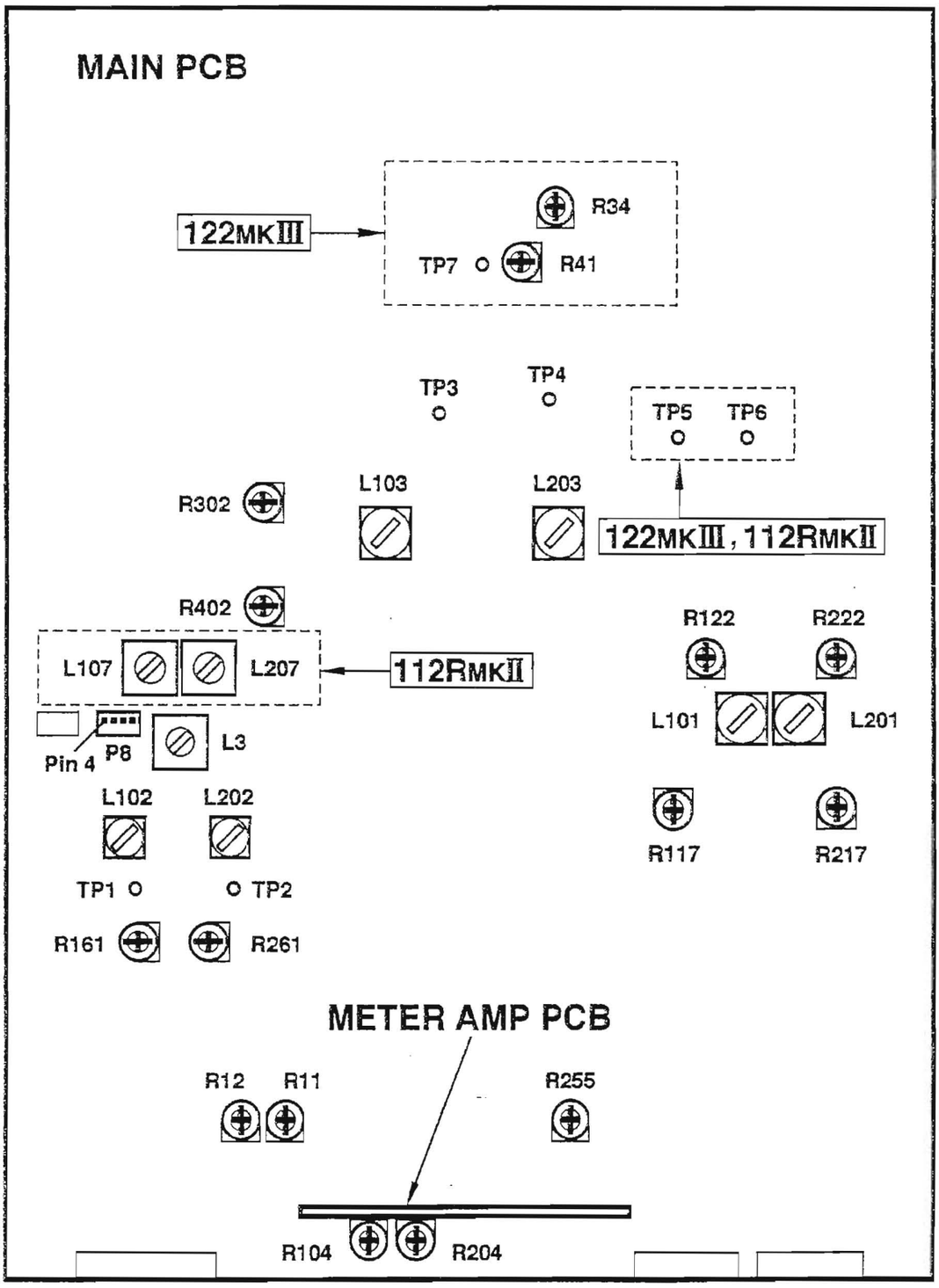

Fig. 3-4 Adjustment and test point locations
調整とテスト・ポイント個所

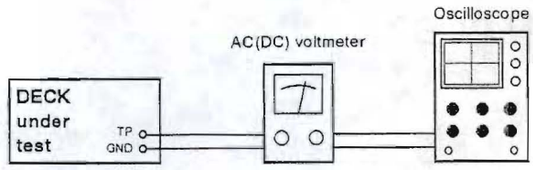

Fig. 3-5

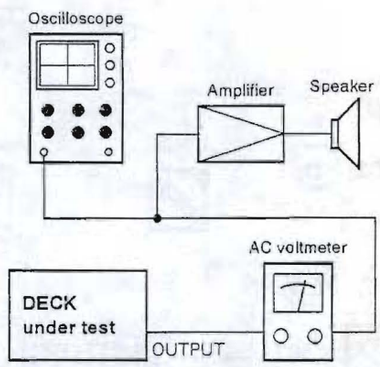

Fig. 3-6

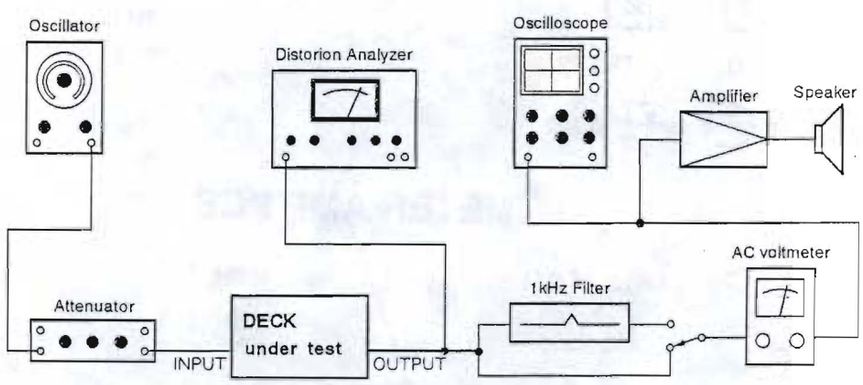

Fig. 3-7

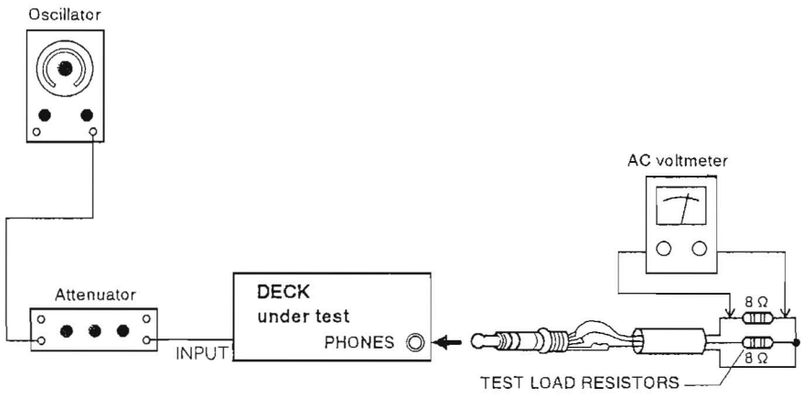

Fig. 3-8

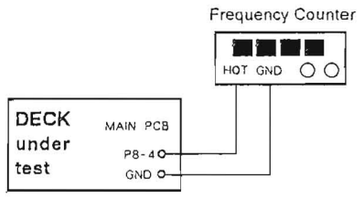

Fig. 3-9

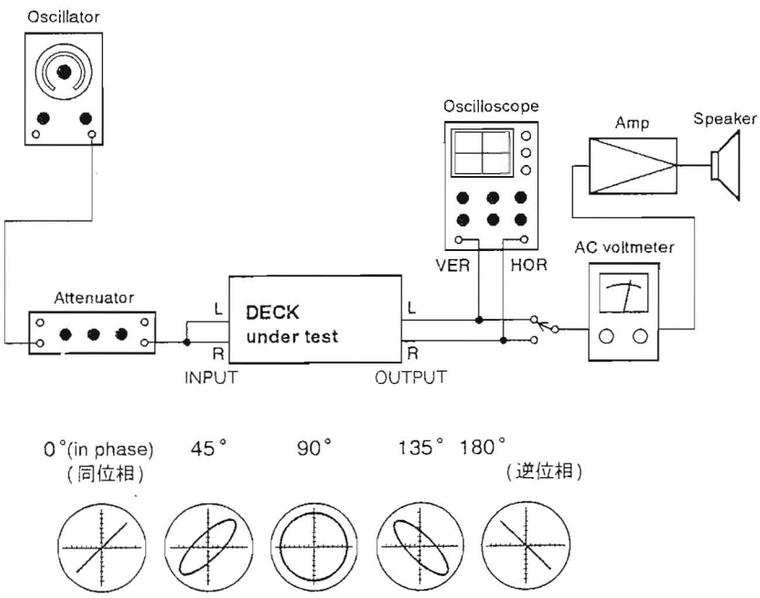

Fig. 3-10

3-1. Precautions

1. Before performing adjustments and checks clean and demagnetize the entire tape path.
2. Indication, for example, "R122/R222" means that R122 is for Lch, R222 is for Rch.
3. 0 dBm is referenced to 0.775 V. 0 dBV is referenced to 1.0 V.
4. The AC voltmeter used in the procedures must have an input impedance of 1 MΩ or more.
5. Unless otherwise specified, refer to Fig. 3-4 for location of test points and adjustment points.
6. Unless otherwise specified, leave all keys and switches in the OFF position.

3-1. 注意

1. アンプ部の調整・確認の前に、テープ走行系の消磁と清掃を行ってください。
2. R122/R222と記されている部番は、Lch/Rchを示します。
3. 0dBm = 0.775V, 0dBV = 1.0Vで表示しています。
4. レベル計は、入力インピーダンス 1MΩ以上のものを使用してください。
5. 特に指示のない場合、テスト・ポイントおよび調整個所は図3-4を参照してください。
6. 特に指示のない限り、キーおよびスイッチ類はOFFにしておいてください。

3-2. Playback System 再生系

Test Mode : PLAY
MONITOR switch : AUTO

Adjustment Item 調整項目	Preliminary 準備・設定	Input Signal 入力信号	Adjustment Point 調整個所	Measurement Method / Value Adjusted For 測定方法・調整値
1. Reproduce reference level 再生基準レベル	Connection (接続) : Fig. 3-5	MTT − 150	R122/R222	122MK Ⅲ, 112RMK Ⅱ : TP5/TP6 : −6dBm 112MK Ⅱ : TP3/TP4 : −6dBm
	Connection (接続) : Fig. 3-6		OUTPUT cont.	OUTPUT (RCA, Lch) : −11dBV
			R255	OUTPUT (RCA, Rch) : −11dBV
			After adjusting, do not move the OUTPUT cont. (Nominal position) 調整後は、OUTPUTつまみを動かさないこと。(規定位置)	
2. Repro. Frequency Response 再生周波数特性	Connection (接続) : Fig. 3-6	MTT − 256	R117/R217	OUTPUT (RCA) : Same output level at 10 kHz and 315 Hz 10kHzの出力レベルが315Hzの出力レベルと同じになるように調整
			Check	Specs (規格) : Fig. 3-1
3. Level Difference between Channels チャネル間レベル差	Same as above 同上	Same as above 同上	Check only	within 3 dB (within the limits of reproduce frequency response) (再生周波数特性規格内において)
4. Level Fluctuation レベル変動	Same as above 同上	Same as above 同上	Check only	63 Hz~6.3 kHz, within 2 dB 6.3 kHz~10 kHz, within 3 dB
5. Reproduce S/N ratio 再生SN比	Same as above 同上	—	Check only	Measure output when leader tape is played back with the unit set for nominal output level, and compare this reading with nominal output level. 基準出力状態で、リーダー・テープを再生したときのノイズ・レベルは基準出力レベルと比べて以下のこと。 S/N (120 μs) : 46 dB or more S/N (70 μs) : 48 dB or more Deference between channels : 4 dB or less

3-3. Monitor System モニター系

Test Mode : STOP (unless otherwise specified 特に指示の無い限り)
MONITOR switch : INPUT

Adjustment Item 調整項目	Preliminary 準備・設定	Input Signal 入力信号	Adjustment Point 調整個所	Measurement Method / Value Adjusted For 測定方法・調整値
1. Minimum input level 最小入力レベル	Connection (接続) : Fig. 3-7 INPUT cont. : Max.	INPUT (Rear, RCA) : 400 Hz／-18 dBV	Check only	OUTPUT (RCA) : -10 dBV ± 3 dB
2. Nominal input level 基準入力レベル	Connection (接続) : Fig. 3-7	INPUT (Rear, RCA) : 400 Hz／-10 dBV	INPUT cont. L, R	OUTPUT (RCA) : -10 dBV
			After adjusting, do not move the INPUT controls. (Nominal position) 調整後は、INPUTつまみを動かさないこと。(規定位置)	
3. Meter level メーター・レベル	Same as above 同上	Same as above 同上	METER AMP PCB : R104／R204	VU meter indication : 0 VU
4. MPX FILTER MPXフィルター	Connection (接続) : Fig. 3-7 MPX FILTER sw. : ON	INPUT (Rear, RCA) : 19 kHz／-10 dBV	L103／L203	OUTPUT (RCA) : Minimum output level (Effect : 30 dB or more) 出力レベルが最小になるよう調整 (効果量は30dB以上のこと)
5. XLR output level XLR出力レベル (122MK III only)	Connection (接続) : Fig. 3-7 INPUT sw. : BAL	INPUT (Rear, XLR) : 400 Hz／+4 dBm	Check only	OUTPUT (XLR) : +4 dBm ± 1 dB at 100 kΩ load (+2.5 dBm ± 1 dB at 600 Ω load)
6. Front input FRONT入力	Connection (接続) : Fig. 3-7	INPUT (Front, 1/4") : 400 Hz／-10 dBV	Check only	OUTPUT (RCA) : -10 dBV ± 2 dB
7. PHONES output level PHONES出力レベル	Connection (接続) : Fig. 3-8 PHONES cont. : Max.	INPUT (Rear, RCA) : 400 Hz／-10 dBV	Check only	PHONES OUT : 100 mW or more (8 Ω load) 100mW以上 (8Ω負荷)
8. Monitor S/N モニターS/N	Connection (接続) : Fig. 3-7	No signal 無信号	Check only	OUTPUT (RCA, XLR) : 60 dB or more (DIN AUDIO) 60dB以上 (DIN AUDIO)
9. Monitor frequency response モニター周波数特性	Same as above 同上	INPUT (Rear, RCA) : 20 ~20 kHz／-10 dBV	Check only	OUTPUT (RCA, XLR) : Specs (規格) : Fig. 3-2
10. Internal osc. 内部発振器 (122MK III only)	Connection (接続) : Fig. 3-5 With REC/PLAY mode, press ADJUST key, then press OSC key. REC/PLAY状態で、ADJUSTキーをONにし、そしてOSCキーをONにする。	No siganal 無信号	R34	While alternating the oscillator signal between 10 kHz and 400 Hz by pressing the 10 kHz sw. on and off, adjust for same output level at TP7. 10 kHzスイッチをON/OFFし、TP7の出力レベルが同じになるように調整する。
			R41	Set the oscillator to 400 Hz (10 kHz sw. off) and adjust for -28 dBV at TP7. 10 kHzスイッチをOFFにし、TP7の出力レベルが -28dBVになるように調整する。

3-4. Recording System 録音系

Test Mode : REC/PLAY (unless otherwise specified 特に指示の無い限り)
MONITOR switch : AUTO

Adjustment Item 調整項目	Preliminary 準備・設定	Input Signal 入力信号	Adjustment Point 調整個所	Measurement Method / Value Adjusted For 測定方法・調整値
1. Bias OSC frequency バイアス発振周波数	112RMK II : Connection (接続) : Fig. 3-9 Test tape : MTT-5571 Mode : FWD REC/PAUSE & REV REC/PAUSE	—	L3 (for FWD) L207 (for REV)	Connector P8 pin4 : 100 ± 0.1 kHz
	122MK III, 112MK II : Connection (接続) : Fig. 3-9 Test tape : MTT-5571 Mode : REC/PAUSE	—	L3	122MK III : Connector P8 pin4 : 150 ± 0.1 kHz 112MK II : Connector P8 pin4 : 100 ± 0.1 kHz
2. HX PRO coil HXプロ コイル	Connection (接続) : Fig. 3-5 Test tape : MTT-5571 Mode : REC/PAUSE	—	L102/L202	TP1/TP2 : Max. DC voltage DC電圧最大
3. Rec azimuth, Temporary bias 録音アジマス、仮バイアス (122MK III only)	Connection (接続) : Fig. 3-10 Test tape : MTT-5512 (NORMAL)	INPUT (Rear, RCA) : 10 kHz/-36 dBV	R161/R261	OUTPUT (RCA) : Max. output level 出力レベル最大
			REC azimuth adj. screw (Fig. 2-4)	OUTPUT (RCA) : Phase between Lch/Rch : 0° LchとRchの位相が同じになるように調整
4. Bias set-1 バイアス・セット-1	Connection (接続) : Fig. 3-7 Test tape : MTT-5512 (NORMAL)	INPUT (Rear, RCA) : 400 Hz, -10 kHz/ -36 dBV	R161/R261	OUTPUT (RCA) : Same output level at 400 Hz and 10 kHz. 400HzとHzの出力レベルが同じになるように調整
5. Rec level-1 録音レベル-1	Same as above 同上	INPUT (Rear, RCA) : 400 Hz/-14 dBV	R302/R402	OUTPUT (RCA) : -14 dBV
6. Bias set-2 バイアス・セット-2	Connection (接続) : Fig. 3-7 Test tape : MTT-5562 (CrO2)	INPUT (Rear, RCA) : 400 Hz, 10 kHz/ -36 dBV	R11	OUTPUT (RCA) : Same output level at 400 Hz and 10 kHz. 400Hzと10kHzの出力レベルが同じになるように調整
	Connection (接続) : Fig. 3-7 Test tape : MTT-5571 (METAL)	Same as above 同上	R12	Same as above 同上
7. Rec level-2 録音レベル-2	Connection (接続) : Fig. 3-7 Test tape : Same item 6.	INPUT (Rear, RCA) : 400 Hz/-14 dBV	Check only	OUTPUT (RCA) : -14 dBV ± 2 dB
8. Total harmonic distortion 総合歪率	Connection (接続) : Fig. 3-7 Test tape : Same item 3 and 6.	Same as above 同上	Check only	OUTPUT (RCA) : 122MK III, 112RMK II : 2.0 % or less for all tapes. 112MK II : 2.5 % or less for all tapes. 各テープで2.0%以下 (112MK IIは、2.5%以下)

Adjustment Item 調整項目	Preliminary 準備・設定	Input Signal 入力信号	Adjustment Point 調整個所	Measurement Method / Value Adjusted For 測定方法・調整値
9. Overall frequency response 総合周波数特性	Connection (接続) : Fig. 3-7 DOLBY NR : OUT and IN	INPUT (Rear, RCA) : 63 Hz ~ 16 kHz/ -36 dBV	Check only	OUTPUT (RCA) : Specs (規格) : Fig. 3-3
10. Level difference between channels チャネル間レベル差	Connection (接続) : Fig. 3-7	INPUT (Rear, RCA) : 63 Hz ~ 10 kHz/ -36 dBV	Check only	OUTPUT (RCA) : 63 Hz ~ 6.3 kHz : within 3 dB 6.3 ~ 10 kHz : within 4 dB
11. Rec/repro level fluctuation 録再レベル変動	Same as above 同上	INPUT (Rear, RCA) : 63 Hz ~ 14 kHz/ -36 dBV	Check only	OUTPUT (RCA) : 400 Hz : within 1 dB 63 Hz ~ 6.3 kHz : within 2 dB 6.3 ~ 14 kHz : 3 dB
12. Track crosstalk トラック間クロストーク	Same as above 同上	INPUT (Rear, RCA) : Lch : no signal Rch : 125 Hz/-10 dBV	Check only	OUTPUT (RCA) : 40 dB or more
	Record a 125 Hz signal on Rch and note output level. Then invert tape and play Rch track. Check leakage level against the output reference of previously recorded portion. Rchに125Hzの信号を録音し、その再生出力を基準レベルとする。 次にテープを反転し、再生したときのRchの出力レベルとの比を測定する。			
13. Channel separation チャネル・セパレーション	Connection (接続) : Fig. 3-7 1 kHz B.P.F. connect 1 kHz B.P.F. 接続	INPUT (Rear, RCA) : Lch : 1 kHz/-10 dBV Rch : no signal	Check only	OUTPUT (RCA) : 30 dB or more
	Find the difference between the 1 kHz recorded portion (Lch) and the "no signal" recorded portion (Rch). 1kHz録音部分 (Lch) と無信号録音部分 (Rch) との再生出力レベルの比を測定する。			
14. Erasure 消去率	Same as above 同上	INPUT (Rear, RCA) : 1 kHz/0 dBV	Check only	OUTPUT (RCA) : 65 dB or more
	Record a 1 kHz signal and rewind tape to mid point of recorded portion. Erase the recorded portion with no input signal and find the difference between the 1 kHz portion and the "no signal" portion. 1kHzの信号を録音後、テープを巻き戻して一部を消去する。未消去部分と消去部分との比を測定する。			
15. Overall S/N 総合S/N	Connection (接続) : Fig. 3-7 Test tape : Same item 8.	No signal 無信号	Check only	OUTPUT (RCA) : MTT-5512 (NORMAL) : 45 dB or more MTT-5562 (CrO2) : 47 dB or more MTT-5571 (METAL) : 47 dB or more Reference level 基準レベル : -10 dBV
16. Bias leakage バイアス洩れ	Connection (接続) : Fig. 3-7 —	No signal 無信号	L101/L201	OUTPUT (RCA) : Minimum bias leakage バイアス洩れ最小 Specs (規格) : -40 dBV or less

4. EXPLODED VIEWS AND PARTS LISTS

分解図とパーツリスト

EXPLODED VIEW-1

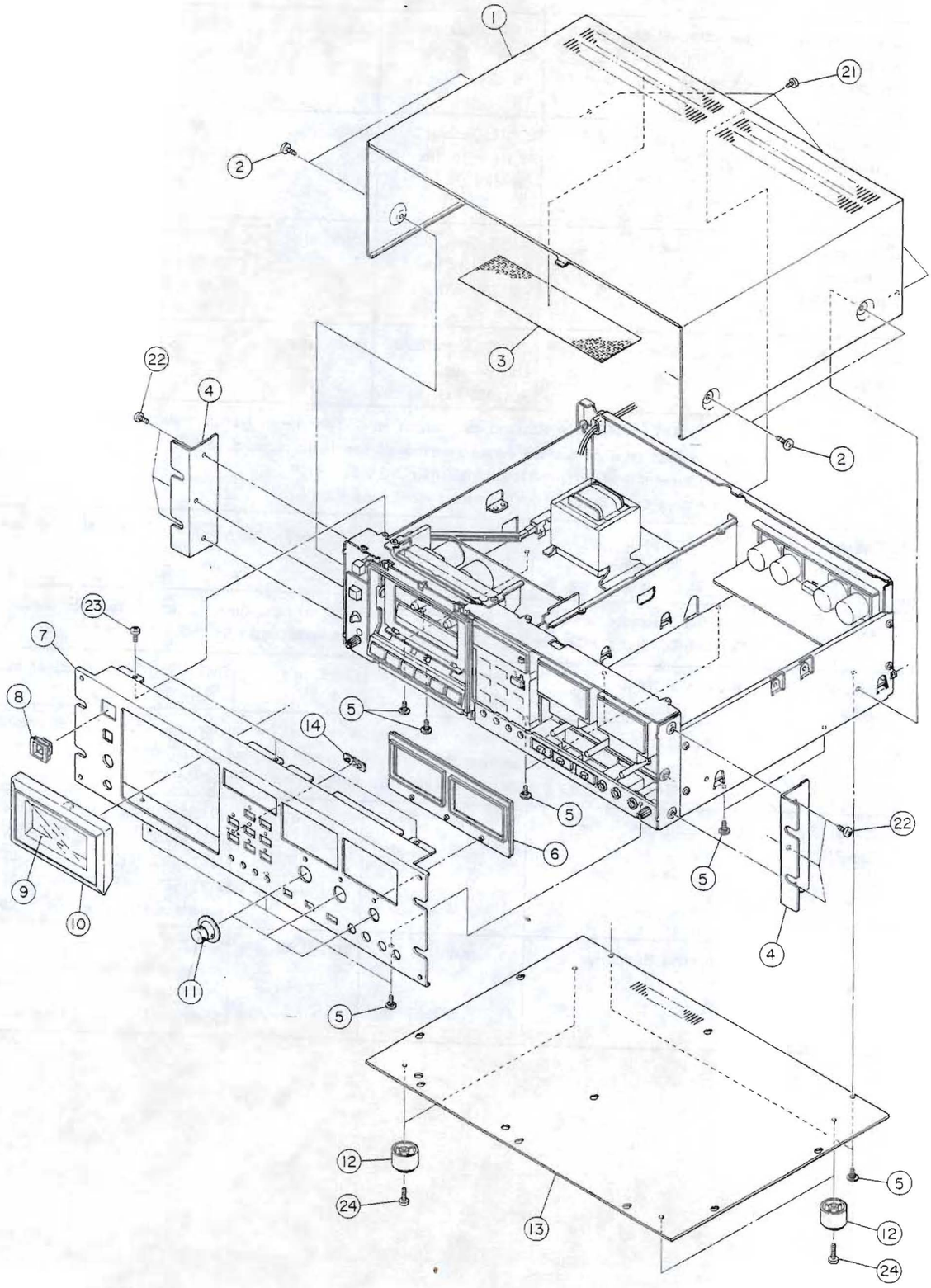

EXPLODED VIEW-1

REF.NO.	PARTS NO.	DESCRIPTION	REMARKS
1- 1	*5801350900	BONNET (B)	
1- 2	*5800612400	SCREW,BONNET M3X8(BLK)	
1- 3	*5801499600	FILTER,BONNET [C]	
1- 4	5801348701	ANGLE	
1- 5	*5801566100	SCREW,STEP S-TITE 3X6	
1- 6	*5801568500	ESCUTCHEON,METER	
1- 7	*5801568000	PANEL,FRONT [112RMK2]	
	*5801568100	PANEL,FRONT [122MK3]	
	*5801568200	PANEL,FRONT [112MK2]	
1- 8	*5801486600	ESCUTCHEON,D P-N15-A	
1- 9	5801501800	WINDOW,CASSETTE	
1-10	5801500700	LID,CASSETTE	
1-11	5801349300	KNOB	
1-12	5504676000	FOOT	
1-13	*5801342500	PLATE,BOTTOM	
1-14	5801568400	LENS [112RMK2]	
1-21	*5783773006	SCREW,BIND B-TITE M3X6(BLK ZN)	
1-22	*5783534008	SCREW,BIND B-TITE M4X8(BLK NI)	
1-23	*5730017600	SCREW,BIND BR-TITE M3X6	
1-24	*5783034020	SCREW,BIND S-TITE M4X20	

INCLUDED ACCESSORIES

REF.NO.	PARTS NO.	DESCRIPTION	REMARKS
	*5700140501	OWNER'S MANUAL(J) [J]	
	*5700140600	OWNER'S MANUAL(F$G) [C,E]	
	*5700140701	OWNER'S MANUAL(E) [EXCEPT J]	
	*5780315015	SCREW,OVAL COUN. M5X15(NI)	
	*5801512200	WASHER,5X12X3	
	*5785225000	WASHER,FIBER 5X10X0.5T(BLK)	

[US]:U.S.A. [E]:EUROPE [UK]:U.K. [C]:CANADA [J]:JAPAN
[A]:AUSTRALIA

Parts marked with * require longer delivery time.

EXPLODED VIEW-2

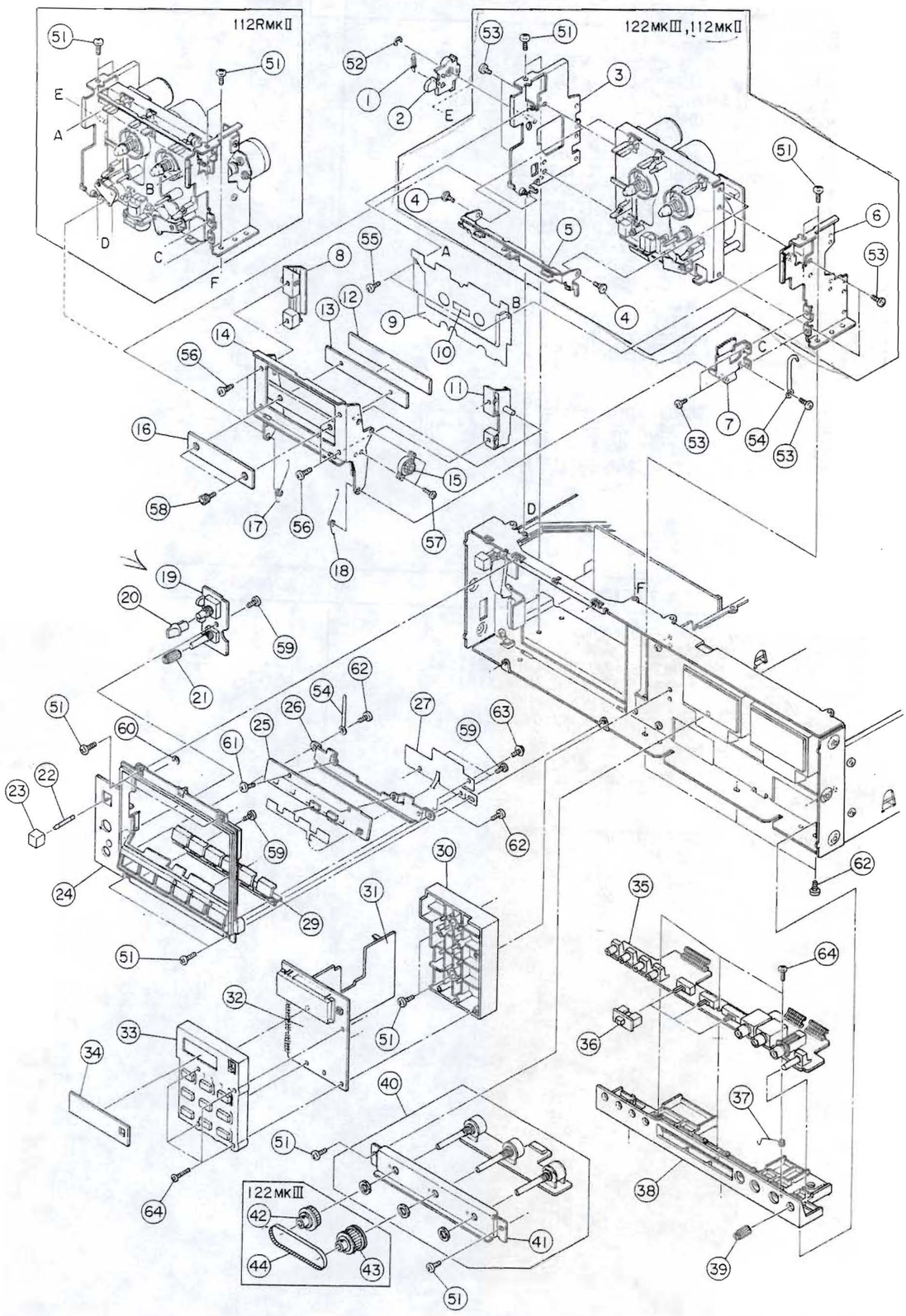

EXPLODED VIEW-2

REF.NO.	PARTS NO.	DESCRIPTION	REMARKS
2- 1	*5801511300	SPRING,LOCK ARM	
2- 2	*5801501500	ARM,LOCK	
2- 3	*5801510000	SIDE CHASSIS(L) ASSY	
2- 4	*5801511200	SCREW,STEP	
2- 5	*5801501900	ARM,SWITCH	
2- 6	*5801502400	CHASSIS(R),SIDE	
2- 7	*5801510100	SUB SIDE HOLDER ASSY	
2- 8	*5801344601	HOLDER(L)	
2- 9	*5801502200	PANEL,CASSETTE	
2-10	5225025500	LED,SLF6010(ORG)	
2-11	*5801344701	HOLDER(R)	
2-12	*5801503000	PAD(UL)	
2-13	*5801343600	SPACER	
2-14	*5801345000	HOLDER ASSY,CASSETTE	
2-15	*5800620500	DAMPER	
2-16	5801503700	PANEL,TRIM	
2-17	*5801515800	SPRING(L),HOLDER	
2-18	*5801515900	SPRING(R),HOLDER	
2-19	*5200362100	P.CONT PCB ASSY [112RMK2]	Refer to pages 40 & 45
	*5200362110	P.CONT PCB ASSY [122MK3]	Refer to pages 40 & 45
	*5200362120	P.CONT PCB ASSY [112MK2]	Refer to pages 40 & 45
2-20	5801412800	KNOB(BL)	
2-21	5801503600	KNOB,PITCH CONTROL	
2-22	*5800472201	ROD,EJECT	
2-23	5801503800	BUTTON,EJECT P-N15-A	
2-24	*5801502500	LID,ESCUTCHEON	
2-25	*5200362200	OP SW PCB ASSY	Refer to pages 42 & 46
2-26	*5801500500	BRACKET,PCB (OP)	
2-27	*5801598400	SHEET,PROTECTION	
2-28	Vacant		
2-29	5801502600	BUTTON(1),OPERATION	
2-30	*5801567600	HOLDER,COUNTER PCB	
2-31	*5200362800	JOINT C PCB ASSY	Refer to pages 38 & 45
2-32	*5200362700	COUNTER PCB ASSY [112RMK2]	Refer to pages 38 & 44
	*5200362710	COUNTER PCB ASSY [122MK3]	Refer to pages 38 & 44
	*5200362720	COUNTER PCB ASSY [112MK2]	Refer to pages 38 & 44
2-33	5801567700	BUTTON,OPERATION [112RMK2]	
	5801567800	BUTTON,OPERATION [122MK3,112MK2]	
2-34	5801568300	WINDOW	
2-35	*5200361500	JACK PCB ASSY [112RMK2]	Refer to pages 39 & 45
	*5200361510	JACK PCB ASSY [122MK3]	Refer to pages 39 & 45
	*5200361520	JACK PCB ASSY [112MK2]	Refer to pages 39 & 45
2-36	5801575000	KNOB,SLIDE	
2-37	*5801599900	SPRING,EARTH	
2-38	*5801567400	HOLDER,JACK PCB	
2-39	5801583600	KNOB,ROTARY	
2-40	*5200361400	VR PCB ASSY [122MK3,112RMK2]	Refer to pages 39 & 45
	*5200361420	VR PCB ASSY [112MK2]	Refer to pages 39 & 45
2-41	*5801567500	HOLDER,R VOL	
2-42	*5800933500	GEAR B [122MK3]	
2-43	*5800933000	GEAR A ASSY [122MK3]	
2-44	5800933600	BELT,TIMING [122MK3]	

(Continued on page 26)

Parts marked with * require longer delivery time.

EXPLODED VIEW-3

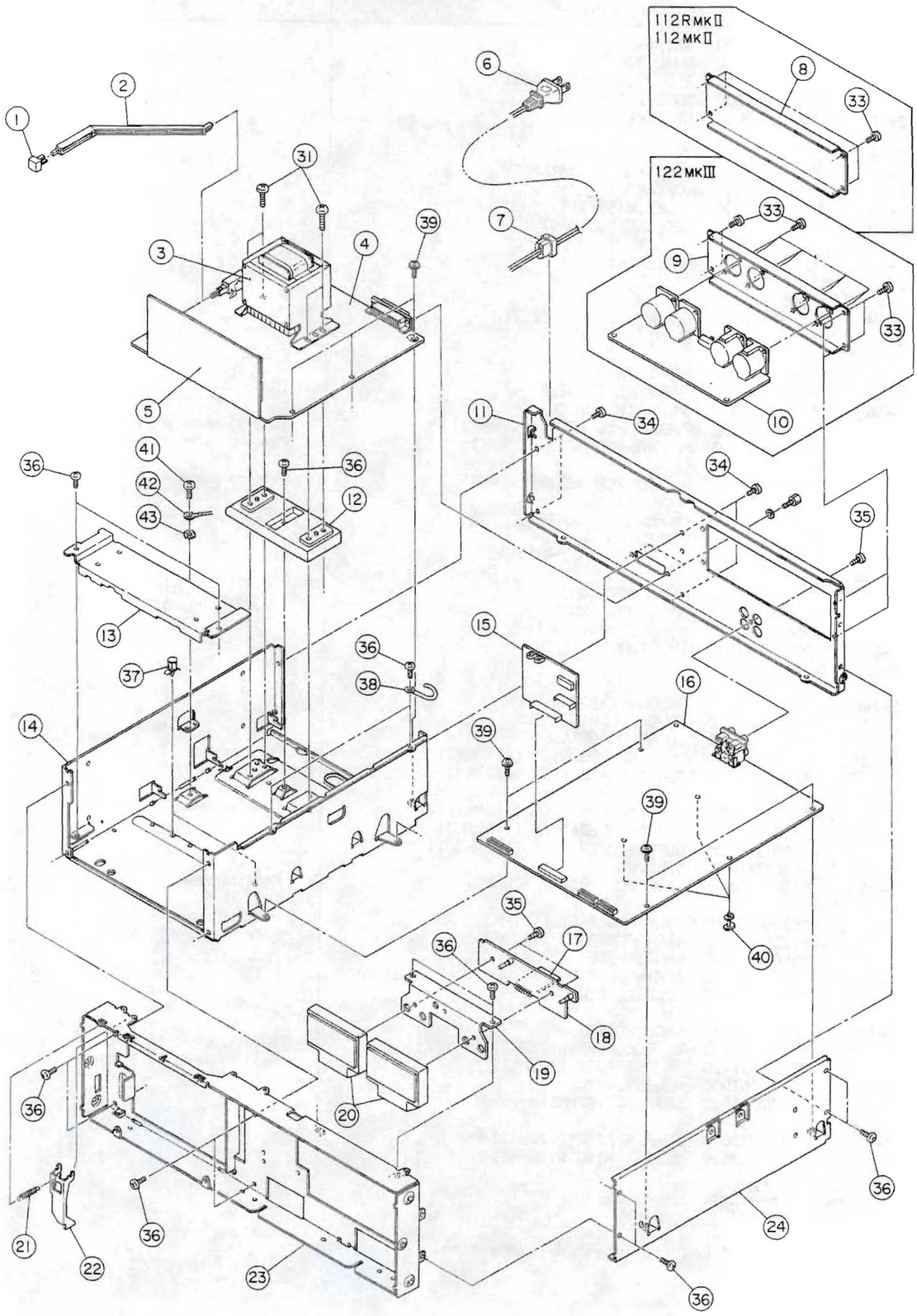

EXPLODED VIEW-3

REF.NO.	PARTS NO.	DESCRIPTION	REMARKS
3- 1	1678822807	BUTTON,POWER	
3- 2	*5801500400	ROD,JOINT	
3- 3	⚠ 5320064400	TRANS.,POWER	
3- 4	*5200361700	CONT M PCB ASSY [112RMK2 J,US,C]	Refer to pages 37 & 44
	*5200361740	CONT M PCB ASSY [112RMK2 E,UK,A]	Refer to pages 37 & 44
	*5200361800	CONT M PCB ASSY [122MK3 J,US,C]	Refer to pages 37 & 44
	*5200361840	CONT M PCB ASSY [122MK3 E,UK,A]	Refer to pages 37 & 44
	*5200361900	CONT M PCB ASSY [112MK2 J,US,C]	Refer to pages 37 & 44
	*5200361940	CONT M PCB ASSY [112MK2 E,UK,A]	Refer to pages 37 & 44
3- 5	*5200362000	CONT S PCB ASSY [112RMK2]	Refer to pages 41 & 46
	*5200362010	CONT S PCB ASSY [122MK3]	Refer to pages 41 & 46
	*5200362020	CONT S PCB ASSY [112MK2]	Refer to pages 41 & 46
3- 6	⚠ 5350015200	CORD,AC MP-220 [J]	
	⚠ 5350019500	CORD,AC SPT-2 [US]	
	⚠ 5350019100	CORD,AC [C]	
	⚠ 5350017500	CORD,AC CLASS 2 [E]	
	⚠ 5128047000	CORD,AC BS [UK]	
	⚠ 5350018200	CORD,AC SAA [A]	
3- 7	⚠*5317003400	BUSHING,2271 [EXCEPT C]	
	⚠*5317005600	BUSHING,2272 [C]	
3- 8	*5801537700	PANEL,XLR A [112RMK2,112MK2]	
3- 9	*5801537900	PANEL,XLR C [122MK3]	
3-10	*5200363000	BAL AMP PCB ASSY [122MK3]	Refer to pages 41 & 46
3-11	*5801537500	PANEL A,REAR	
3-12	*5801349500	HOLDER,TRANS.	
3-13	*5801502100	BASE,MECHA.	
3-14		CHASSIS,MAIN	
3-15	*5200362600	METER AMP PCB ASSY [112RMK2,112MK2]	Refer to pages 40 & 45
	*5200362610	METER AMP PCB ASSY [122MK3]	Refer to pages 40 & 45
3-16	*5200361300	MAIN PCB ASSY [112RMK2]	Refer to pages 33 & 43
	*5200361310	MAIN PCB ASSY [122MK3]	Refer to pages 33 & 43
	*5200361320	MAIN PCB ASSY [112MK2]	Refer to pages 35 & 43
3-17	*5200362500	JOINT M PCB ASSY	Refer to pages 40 & 46
3-18	*5200362400	METER PCB ASSY	Refer to pages 41 & 46
3-19	*5801567300	HOLDER,METER	
3-20	5296006101	METER,VU	
3-21	*5801511400	SPRING,EJECT ARM	
3-22	*5801501600	ARM,EJECT	
3-23	*5801567200	CHASSIS,FRONT	
3-24	*5801499400	CHASSIS,SIDE	
3-31	*5783034021	SCREW,BIND S-TETE M4X21	
3-32	Vacant		
3-33	*5783613008	SCREW,B. C-TITE M3X8(BLK NI)	
3-34	*5783773006	SCREW,BIND B-TITE M3X6(BLK ZN)	
3-35	*5783543008	SCREW,BIND P-TITE M3X8(BLK NI)	
3-36	*5730017600	SCREW,BIND BR-TITE M3X6	
3-37	*5787060700	SPACER,PUSH PS-7 A=11.11	
3-38	*5786713400	CLIP,HARNESS 3.2X6.0X47	
3-39	*5783073008	SCREW,PAN CAP S-TITE M3X8	
3-40	*5730041500	SUPPORT,PCB MPS-10-0	
3-41	*5783034006	SCREW,BIND S-TITE M4X6 [C]	
3-42	*5786700600	EARTH RAG,B-6 4.2	
3-43	*5785124000	WASHER,LOCK 4.0(OUTER) [C]	

[US]:U.S.A. [E]:EUROPE [UK]:U.K. [C]:CANADA [J]:JAPAN
[A]:AUSTRALIA

Parts marked with * require longer delivery time.

EXPLODED VIEW-4 (122MKIII)

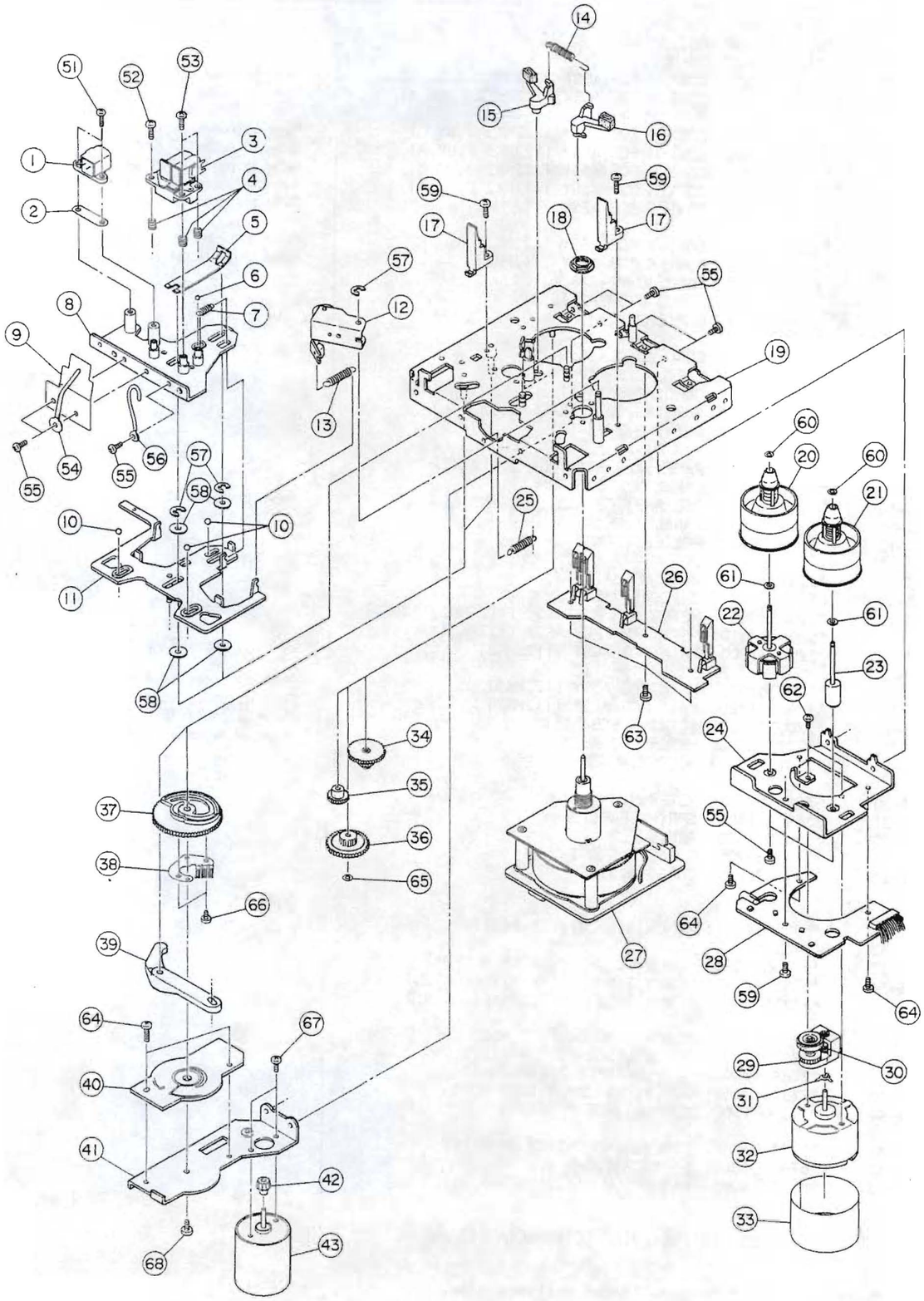

EXPLODED VIEW-4 [122MKIII]

REF.NO.	PARTS NO.	DESCRIPTION	REMARKS
4- 1	5378906900	HEAD,ERASE LE15A	
4- 2	*5801357800	SPACER,EH 0.05	
	*5800556200	SPACER,EH 0.1	
	*5801197800	SPACER,EH 0.2	
4- 3	5801585400	R/P HEAD ASSY	
4- 4	*5800931300	SPRING,HEAD	
4- 5	*5801481400	SPRING,PRESSURE	
4- 6	5540055000	STEEL BALL,2.0	
4- 7	*5801005700	SPRING,HEAD BASE	
4- 8	*5801578500	HEAD BASE DD ASSY	
4- 9	*5801597300	SHEET,HEAD SHIELD	
4-10	5540056000	STEEL BALL,3.0	
4-11	*5801475000	SLIDER ASSY	
4-12	5800955400	PINCH ROLLER ARM ASSY(R)	
4-13	*5800955800	SPRING,PINCH ROLLER(R)	
4-14	*5801475700	SPRING,BRAKE	
4-15	5801475300	BRAKE ARM(L) ASSY	
4-16	5801475500	BRAKE ARM(R) ASSY	
4-17	*5800117400	GUIDE,CASSETTE	
4-18	5730029100	NUT,FLANGE M9X0.75X2.5	
4-19	9206 6005-00	MECHA. CHASSIS DD ASSY	
4-20	5801578200	REEL TABLE H ASSY	
4-21	5801579500	REEL TABLE HD ASSY	
4-22	5801577700	COIL SHAFT ASSY H	
4-23	5801577400	REEL SHAFT BASE ASSY	
4-24	*5801576000	BRACKET,REEL	
4-25	*5801476200	SPRING,BASE ARM	
4-26	*5200363510	SW(E) PCB ASSY	Refer to pages 42 & 46
4-27	~~5370012100~~	MOTOR,DC CAPSTAN DD DL-528-001A	
4-28	*5200363310	SENSOR(R) PCB ASSY	Refer to pages 42 & 47
4-29	5801473002	DRIVING PULLY ASSY	
4-30	5801474500	GEAR,REEL MOTOR	
4-31	5801494600	SPRING,THRUST	
4-32	5370002502	REEL MOTOR	
4-33	*5800235900	PLATE,SHIELD	
4-34	5801474300	GEAR C	
4-35	5801474101	GEAR A	
4-36	5801474200	GEAR B	
4-37	5801474600	CAM,CONTROL	
4-38	5801474700	PLATE,CONTACT	
4-39	*5801474800	ARM,BASE	
4-40	5210334000	CAM PCB	
4-41	*5801474000	BRACKET,MOTOR	
4-42	5801474400	GEAR,MOTOR	
4-43	5370010300	MOTOR,DC MXN-13FB12F	

Parts marked with * require longer delivery time.

EXPLODED VIEW-4 [122MKIII]

REF.NO.	PARTS NO.	DESCRIPTION	REMARKS
4-51	*5780012006	SCREW,BIND M2X6(NI)	
4-52	*5730029400	SCREW,PWA2*8FNI	
4-53	*5780012008	SCREW,BIND M2X8(NI)	
4-54	*5786713300	CLIP,HARNESS 3.2X9.1X29.3	
4-55	*5783002605	SCREW,PAN S-TITE M2.6X5	
4-56	*5786713400	CLIP,HARNESS 3.2X6.0X47	
4-57	*5786002000	E-RING,E-2	
4-58	*5785313000	WASHER,POLYS. 3X6X0.5T	
4-59	*5783032606	SCREW,BIND S-TITE M2.6X6	
4-60	*5785331200	WASHER,POLYS. 1.2X3.0X0.5T(CUT)	
4-61	*5800539800	WASHER,TEFLON 1.7X4X0.3T	
4-62	*5780002603	SCREW,BIND M2.6X3	
4-63	*5783032004	SCREW,BIND S-TITE M2X4	
4-64	*5783032605	SCREW,BIND S-TITE M2.6X5	
4-65	*5785331500	WASHER,POLYS. 1.5X4X0.5T(CUT)	
4-66	*5781112004	SCREW,BIND TAPP. #2 M2X4	
4-67	*5780003003	SCREW,BIND M3X3	
4-68	*5780002004	SCREW,BIND M2X4	

EXPLODED VIEW-2 (Continued from page 21)

REF.NO.	PARTS NO.	DESCRIPTION	REMARKS
2-51	*5730017600	SCREW,BIND BR-TITE M3X6	
2-52	*5786003000	E-RING,E-3	
2-53	*5783002605	SCREW,PAN S-TITE M2.6X5	
2-54	*5786713400	CLIP,HARNESS 3.2X6.0X47	
2-55	*5783830104	SCREW,PAN S-TITE M2.6X4(BLK ZN)	
2-56	*5781162606	SCREW,BIND TAPP. #2 M2.6X6(BLK NI)	
2-57	*5783032004	SCREW,BIND S-TITE M2X4	
2-58	5781713003	SCREW,CAP M3X3(BLK NI)	
2-59	*5783602608	SCREW,BIND P-TITE M2.6X8	
2-60	*5786002500	E-RING,E-2.5	
2-61	*5780003004	SCREW,BIND HEAD M3X4	
2-62	*5783543008	SCREW,BIND P-TITE M3X8(BLK NI)	
2-63	*5780053005	SCREW,BIND SEMS-F M3X5	
2-64	*5783640208	SCREW,PAN P-TITE 2X8	

Parts marked with * require longer delivery time.

EXPLODED VIEW-5 (112RMKII)

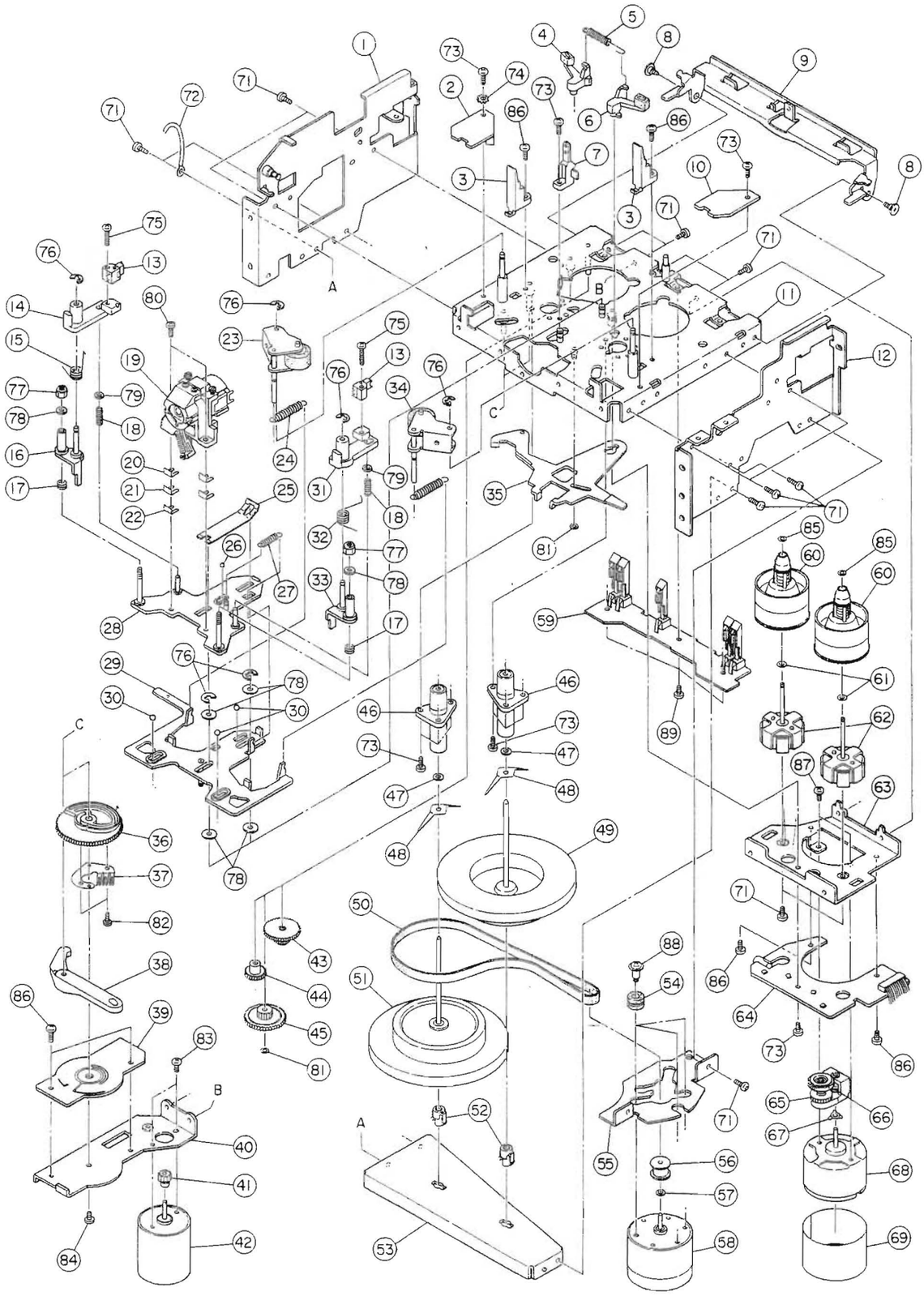

EXPLODED VIEW-5 [112RMKII]

REF.NO.	PARTS NO.	DESCRIPTION	REMARKS
5- 1	*5801510000	SIDE CHASSIS(L) ASSY	
5- 2	*5200363200	SW(R) PCB ASSY	Refer to pages 42 & 47
5- 3	*5800117400	GUIDE,CASSETTE	
5- 4	5801475300	BRAKE ARM(L) ASSY	
5- 5	*5801475700	SPRING,BRAKE	
5- 6	5801475500	BRAKE ARM(R) ASSY	
5- 7	5228009900	PHOTO SENSOR,59027-4	
5- 8	*5801511200	SCREW,STEP	
5- 9	*5801501900	ARM,SWITCH	
5-10	*5210363400	JOINT(R) PCB	Refer to page 42
5-11		MECHA CHASSIS R ASSY	
5-12	*5801502400	CHASSIS(R),SIDE	
5-13	5378906500	HEAD,ERASE	
5-14	*5801343400	BASE(L),EH	
5-15	*5800615501	SPRING L,ERASE HEAD ARM	
5-16	*5800618700	ERASE HEAD ARM L SUB ASSY	
5-17	*5800615300	SPRING,ERASE HEAD HEIGHT	
5-18	*5800615700	SPRING,ERASE HEAD ARM GUIDE	
5-19	5801583900	R/P HEAD ASSY H	
5-20	5801357700	SPACER,R/P HEAD 0.05	
5-21	5800595000	SPACER,A 0.1MM	
5-22	5800595100	SPACER,B 0.2MM	
5-23	5801577300	PINCH ARM L ASSY	
5-24	*5801576900	SPRING,PINCH ARM	
5-25	*5801481400	SPRING,PRESSURE	
5-26	5540055000	STEEL BALL,2.0	
5-27	*5801005700	SPRING,HEAD BASE	
5-28	*5800618101	HEAD BASE ASSY	
5-29	*5801475000	SLIDER ASSY	
5-30	5540056000	STEEL BALL,3.0	
5-31	*5801343500	BASE(R),EH	
5-32	*5800615601	SPRING R,ERASE HEAD ARM	
5-33	*5800618800	ERASE HEAD ARM R SUB ASSY	
5-34	5801577200	PINCH ARM R ASSY	
5-35	*5801575700	DIRECTION LEVER ASSY	
5-36	5801474600	CAM,CONTROL	
5-37	*5801474700	PLATE,CONTACT	
5-38	*5801474800	ARM,BASE	
5-39	5210334000	CAM PCB	
5-40	*5801474000	BRACKET,MOTOR	
5-41	5801474400	GEAR,MOTOR	
5-42	5370010300	MOTOR,DC MXN-13FB12F	
5-43	5801474300	GEAR C	
5-44	5801474101	GEAR A	
5-45	5801474200	GEAR B	
5-46	5800732100	HOLDER ASSY,METAL	
5-47	*5800729400	WASHER(A),TEFLON	
5-48	5801197900	SPRING(U),THRUST	
5-49	5800732300	CAPSTAN ASSY(R)	
5-50	5534810000	BELT,CAPSTAN	
5-51	5800732200	CAPSTAN ASSY(L)	
5-52	*5801198100	SUPPORT(F),THRUST	
5-53	5801576300	PLATE,FW SUPPORT	
5-54	5534537001	CUSHION,MOTOR	
5-55	*5801576200	BRACKET,CAPSTAN MOTOR	

Parts marked with * require longer delivery time.

EXPLODED VIEW-5 [112RMKII]

REF.NO.	PARTS NO.	DESCRIPTION	REMARKS
5-56	5801006500	PULLEY,CM	
5-57	5801008000	WASHER,OIL	
5-58	5370009800	MOTOR,CAPSTAN DC EG-530KD-2F	
5-59	*5200363500	SW(E) PCB ASSY	Refer to pages 42 & 46
5-60	5801578200	REEL TABLE H ASSY	
5-61	5800539800	WASHER,TEFLON 1.7X4X0.3T	
5-62	5801577700	COIL SHAFT ASSY H	
5-63	*5801576000	BRACKET,REEL	
5-64	*5200363300	SENSOR(R) PCB ASSY	Refer to pages 42 & 47
5-65	5801473002	DRIVING PULLEY ASSY	
5-66	5801474500	GEAR,REEL MOTOR	
5-67	5801494600	SPRING,THRUST	
5-68	5370002502	MOTOR,DC REEL	
5-69	*5800235900	PLATE,SHIELD	
5-71	*5783002605	SCREW,PAN S-TITE M2.6X5	
5-72	*5786713400	CLIP,HARNESS 3.2X6.0X47	
5-73	*5783032606	SCREW,BIND S-TITE M2.6X6	
5-74	*5785122600	WASHER,LOCK 2.6	
5-75	*5780012008	SCREWR,BIND M2X8(NI)	
5-76	*5786002000	E-RING,E-2	
5-77	*5781952600	NUT,NYLON M2.6	
5-78	*5785313000	WASHER,POLYS. 3X6X0.5T	
5-79	*5785302400	WASHER,POLYS. 2.1X5X025T	
5-80	*5780002006	SCREW,BIND M2X6	
5-81	*5785331500	WASHER,POLYS. 1.5X4X0.5T(CUT)	
5-82	*5781112004	SCREW,BIND TAPP. #2 M2X4	
5-83	*5780003003	SCREW,BIND M3X3	
5-84	*5780002004	SCREW,BIND M2X4	
5-85	*5785331200	WASHER,POLYS. 1.2X3.0X0.5T(CUT)	
5-86	*5783032605	SCREW,BIND S-TITE M2.6X5	
5-87	*5780002603	SCREW,BIND M2.6X3	
5-88	5730033100	SCREW,SHOLDEK M2.6X5-2	
5-89	*5783032004	SCREW,BIND S-TITE M2X4	

Parts marked with * require longer delivery time.

EXPLODED VIEW-6 (112MKII)

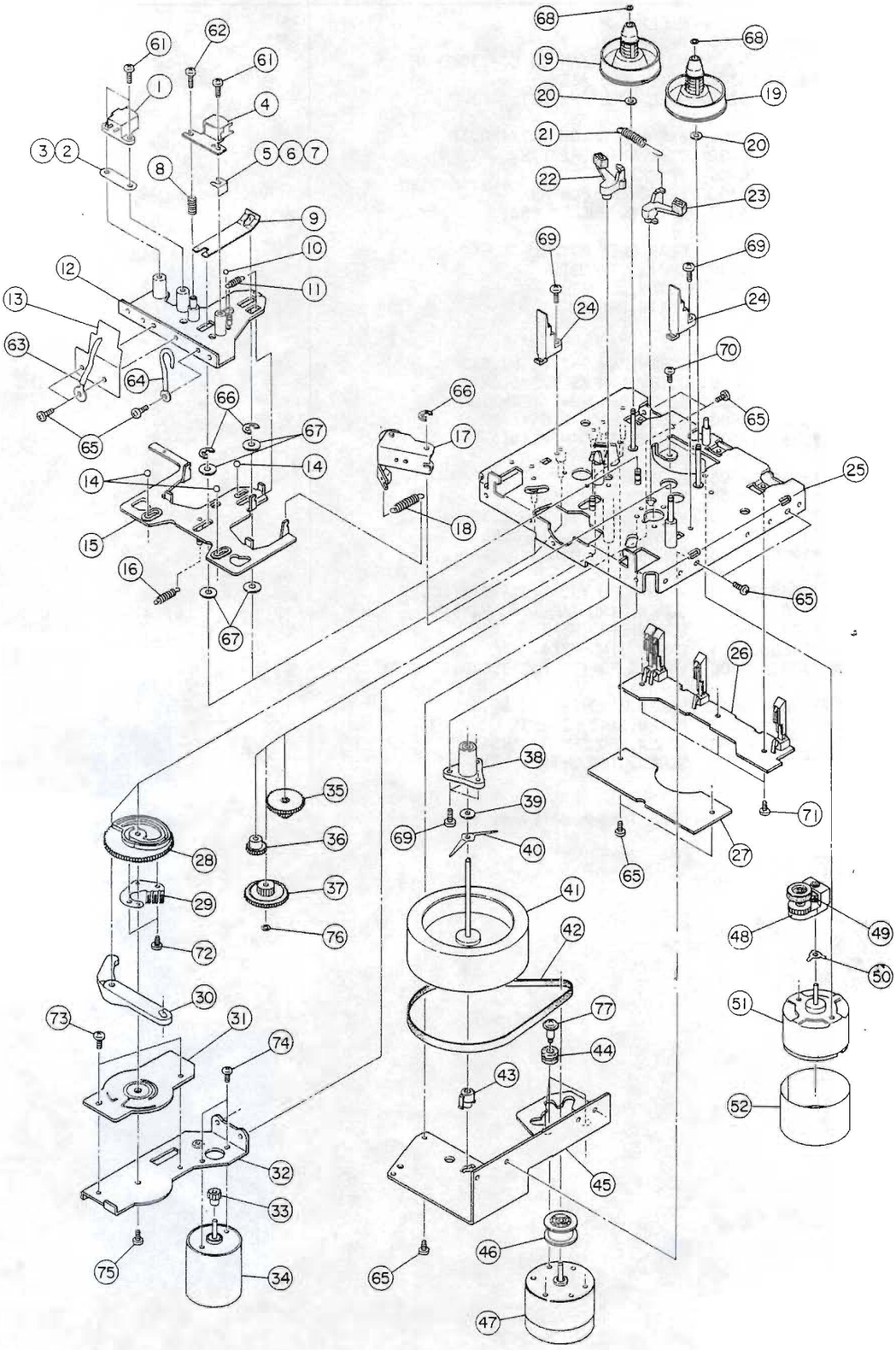

EXPLODED VIEW-6 [112MKII]

REF.NO.	PARTS NO.	DESCRIPTION	REMARKS
6- 1	5378906900	HEAD,ERASE LE15A	
6- 2	*5801197800	SPACER,EH 0.2	
6- 3	*5801357800	SPACER,EH 0.05	
	*5800556200	SPACER,EH 0.1	
6- 4	5378907100	HEAD,R/P SS15R	
6- 5	5801357700	SPACER,R/P HEAD 0.05	
6- 6	5800595000	SPACER,A 0.1MM	
6- 7	5800595100	SPACER,B 0.2MM	
6- 8	*5800931300	SPRING,HEAD	
6- 9	*5801481400	SPRING,PRESSURE	
6-10	5540055000	STEEL BALL.2.0	
6-11	*5801005700	SPRING,HEAD BASE	
6-12	*5801472400	HEAD BASE(4) ASSY	
6-13	*5801597300	SHEET,HEAD SHIELD	
6-14	5540056000	STEEL BALL,3.0	
6-15	*5801475000	SLIDER ASSY	
6-16	*5801476200	SPRING,BASE ARM	
6-17	5800955400	PINCH ROLLER ARM ASSY(R)	
6-18	*5800955800	SPRING,PINCH ROLLER(R)	
6-19	5801480700	REEL TABLE S ASSY	
6-20	5800539800	WASHER,TEFLON 1.7X4X0.3T	
6-21	*5801475700	SPRING,BRAKE	
6-22	5801475300	BRAKE ARM(L) ASSY	
6-23	5801475500	BRAKE ARM(R) ASSY	
6-24	*5800117400	GUIDE,CASSETTE	
6-25		MECHA. CHASSIS S4 ASSY	
6-26	*5200333900	SW PCB ASSY	Refer to pages 42 & 47
6-27	*5200343210	SENSOR PCB ASSY	Refer to pages 42 & 47
6-28	5801474600	CAM,CONTROL	
6-29	5801474700	PLATE,CONTACT	
6-30	*5801474800	ARM,BASE	
6-31	5210334000	CAM PCB	
6-32	*5801474000	BRACKET,MOTOR	
6-33	5801474400	GEAR,MOTOR	
6-34	5370010300	MOTOR,DC MXN-13FB12F	
6-35	5801474300	GEAR C	
6-36	5801474101	GEAR A	
6-37	5801474200	GEAR B	
6-38	5800106200	HOLDER ASSY,METAL	
6-39	5800729400	WASHER(A),TEFLON	
6-40	5801197900	SPRING,THRUST (U)	
6-41	5800735101	CAPSTAN ASSY	
6-42	5800735500	BELT,CAPSTAN	
6-43	5801198100	SUPPRT(F),THRUST	
6-44	5534537001	CUSHION,MOTOR	
6-45	*5801198001	PLATE(P),FW SUPPORT	
6-46	5801584000	PULLY,CAPSTAN 8.35	
6-47	5370008700	MOTOR,CAPSTAN DC EG-530KD-2B	
6-48	5801473002	DRIVING PULLY ASSY	
6-49	5801474500	GEAR,REEL MOTOR	
6-50	5801494600	SPRING,THRUST	
6-51	5370002502	MOTOR,DC REEL	
6-52	*5800235900	PLATE,SHIELD	

Parts marked with * require longer delivery time.

EXPLODED VIEW-6 [112MKII]

REF.NO.	PARTS NO.	DESCRIPTION	REMARKS
6-61	*5780012006	SCREW,BIND M2X6(NI)	
6-62	*5730029400	SCREW,PWA2*8FNI	
6-63	*5786713300	CLIP,HARNESS 3.2X9.1X29.3	
6-64	*5786713400	CLIP,HARNESS 3.2X6.0X47	
6-65	*5783002605	SCREW,PAN S-TITE M2.6X5	
6-66	*5786002000	E-RING,E-2	
6-67	*5785313000	WASHER,POLYS. 3X6X0.5T	
6-68	*5785331200	WASHER,POLYS. 1.2X3.0X0.5T(CUT)	
6-69	*5783032606	SCREW,BIND S-TITE M2.6X6	
6-70	*5780002603	SCREW,BIND M2.6X3	
6-71	*5783032004	SCREW,BIND S-TITE M2X4	
6-72	*5781112004	SCREW,BIND TAPP. #2 M2X4	
6-73	*5783032605	SCREW,BIND S-TITE M2.6X5	
6-74	*5780003003	SCREW,BIND M3X3	
6-75	*5780002004	SCREW,BIND M2X4	
6-76	*5785331500	WASHER,POLYS. 1.5X4X0.5T(CUT)	
6-77	5730033100	SCREW,SHOLDEK M2.6X5-2	

Parts marked with * require longer delivery time.

MAIN PCB ASSY

REF.NO.	PARTS NO.	DESCRIPTION
	*5200361300	MAIN PCB ASSY [112RMK2]
	*5200361310	MAIN PCB ASSY [122MK3]
	*5200361320	MAIN PCB ASSY [112MK2]
	*5210361302	MAIN PCB [122MK3,112RMK2]
	*5210364601	MAIN PCB [112MK2]
	*5730039200	HEAT SINK,OSH-2425-SPL
	*5555590000	PLATE A,EARTH
	*5780003008	SCREW,BIND M3X8
D1	5224015020	DIODE,1SS133T-77 [122MK3,112MK2]
D2-5	5224015020	DIODE,1SS133T-77
D7 ⚠	5228010800	SILICON STACK,S2VB10
D8	5224015020	DIODE,1SS133T-77
D9	5224012920	DIODE,1S2473
D10	5224015020	DIODE,1SS133T-77
D101,201	5224015020	DIODE,1SS133T-77 [112MK2]
J1,2	5336399400	CONNECTOR,10R-FJ
J3	5336399800	CONNECTOR,14R-FJ
J4	5336282500	SOCKET,CON. IL-SDD-15S-S2L2
J102	5330509500	JACK,PIN 4P YKC21-0062
L1,2	5286031000	COIL,CHOKE 220UH LAL04NA
L3	5286038700	COIL,OSC 150KHZ [122MK3,112MK2]
	5286053700	COIL,OSC 100KHZ [112RMK2]
L101,201	5292813300	FILTER,LOW PASS 22KHZ [122MK3,112MK2]
	5292810600	FILTER,LOW PASS 22KHZ [112RMK2]
L102,202	5286038500	COIL,STEPUP 150K [122MK3,112RMK2]
	5286047600	COIL,STEPUP 100K [112MK2]
L103,203	5292810000	FILTER,LOW PASS MPX [122MK3,112RMK2]
	5292805600	FILTER,LOW PASS MPX [112MK2]
L104,204	5286040820	COIL,CHOKE 8.2MH VT
L105,205	5286041420	COIL,CHOKE 27.0MH VT
L106,206	5286038900	COIL,TRAP 150KHZ [122MK3,112RMK2]
L107,207	5286024500	COIL,270UH [112RMK2]
P1	5336249600	PLUG,CONN. B06B-PH-K-S(WHT)
P5	5336249700	PLUG,CONN. B07B-PH-K-S(WHT)
P6	5336250400	PLUG,CONN. B14B-PH-K-S(WHT)
P7	5336249400	PLUG,CONN. B04B-PH-K-S(WHT) [122MK3,112RMK2]
P8	5336251400	PLUG,CONN. B04B-PH-K-R(RED)
P9	5336135300	PLUG,CONN. 8263-0312(RED)
P10	5336135400	PLUG,CONN. 8263-0412(RED)
Q1,2	5232254820	TR.,DIGI. DTA124ES [112MK2]
Q3	5232254820	TR.,DIGI. DTA124ES [122MK3,112RMK2]
Q4	5232255720	TR.,DIGI. DTC124ES [122MK3,112RMK2]
Q5	5232254820	TR.,DIGI. DTA124ES
Q6	5232255720	TR.,DIGI. DTC124ES
Q7	5232254820	TR.,DIGI. DTA124ES [122MK3,112RMK2]
Q8,9	5232260800	TR.,ARRAY DT5A124E
Q10	5232260900	TR.,ARRAY DT5C124E

MAIN PCB ASSY

REF.NO.	PARTS NO.	DESCRIPTION
Q11	5232255720	TR.,DIGI. DTC124ES [122MK3]
Q12-14	5232255720	TR.,DIGI. DTC124ES
Q15	5230782320	TR.,JC501Q
Q16	5230019020	TR.,2SA933SLN
Q17,18	5230782320	TR.,JC501Q [122MK3,112MK2]
	5230780920	TR.,2SC2603F [112RMK2]
Q19	5232254820	TR.,DIGI. DTA124ES [112MK2]
Q20	5232255720	TR.,DIGI. DTC124ES [112MK2]
Q21	5232255720	TR.,DIGI. DTC124ES
Q22	5232254920	TR.,DIGI. DTA144ES [122MK3]
Q23	5232262020	TR.,DIGI. DTC144VS [122MK3]
Q24	5232261320	TR.,DIGI. DTC314TS [122MK3]
Q26 ⚠	5231762800	TR.,2SD1913R
Q27 ⚠	5230509700	TR.,2SB1274R
Q101,201	5230774400	TR.,2SC-1845E [112MK2]
Q103,203	5230775020	TR.,2SC2878-B [112MK2]
Q104,204	5232008600	FET.,2SK389BL [122MK3,112RMK2]
Q105-109	5232261320	TR.,DIGI. DTC314TS
Q205-209	5232261320	TR.,DIGI. DTC314TS
Q110-113	5232255720	TR.,DIGI. DTC124ES
Q114,214	5232261320	TR.,DIGI. DTC314TS [112MK2]
Q210-213	5232255720	TR.,DIGI. DTC124ES
R11	5280020900	R.,TRIMMER 2.2KB [122MK3,112RMK2]
	5280021100	R.,TRIMMER 4.7KB [112MK2]
R12	5280021100	R.,TRIMMER 4.7KB
R25,26 ⚠	5241273710	R.,INCOMB. 22 OHM 1W
R34	5280021700	R.,TRIMMER 47KB [122MK3]
R41	5280020900	R.,TRIMMER 2.2KB [122MK3]
R111,211	5183578000	R.,INCOMB. 1/4W 100
R117,217	5280020900	R.,TRIMMER 2.2KB
R122,222	5280021100	R.,TRIMMER 4.7KB
R161,261	5280021100	R.,TRIMMER 4.7KB [122MK3,112RMK2]
	5280020900	R.,TRIMMER 2.2KB [112MK2]
R255	5280020900	R.,TRIMMER 2.2KB
R302,402	5280021300	R.,TRIMMER 10KB
R506	5280021700	R.,TRIMMER,47KB [112RMK2]
U100	5220426200	IC.,M51143AL [112RMK2]
U101	5220440600	IC.,NJM4565L
U102	5220444700	IC.,CXA1330S [122MK3,112RMK2]
U103	5220440600	IC.,NJM4565L
U104	5220041100	IC.,DIGI. BU4066B [122MK3,112RMK2]
U105	5220041100	IC.,DIGI. BU4066B
U106	5220440600	IC.,NJM4565L [122MK3]
U107	5220440600	IC.,NJM4565L
U108	5220041100	IC.,DIGI. BU4066B [122MK3]
U109	5220430400	IC.,UPC1297CA
U110,111	5220041100	IC.,DIGI. BU4066B [122MK3]
U114	5220444700	IC.,CXA1330S
U116	5220440600	IC.,NJM4565L
U117	5220446000	IC.,LA6515
U118	5220425800	IC.,M5230LA

Parts marked with * require longer delivery time.

CONT M PCB ASSY

REF.NO.		PARTS NO.	DESCRIPTION
		*5200361700	CONT M PCB ASSY [112RMK2/J,US,C]
		*5200361740	CONT M PCB ASSY [112RMK2/E,UK,A]
		*5200361800	CONT M PCB ASSY [122MK3/J,US,C]
		*5200361840	CONT M PCB ASSY [122MK3/E,UK,A]
		*5200361900	CONT M PCB ASSY [112MK2/J,US,C]
		*5200361940	CONT M PCB ASSY [112MK2/E,UK,A]
		*5210361702	CONT M PCB
		*5332015800	HOLDER,FUSE [E,UK,A]
		*5555590000	PLATE A,EARTH
		*5730039200	HEAT SINK,OSH-2425-SPL
		*5780003008	SCREW,BIND M3X8
		*5800990100	HEAT SINK
		*5783723008	SCREW,BIND B-TITE M3X8
		*5800673000	HEAT SINK
C25	⚠	5267703800	SPARK KILLER,4700PF400V M
CR1		5347017700	OSC.,EFO-GC4194A4
D1-7		5224015020	DIODE,1SS133T-77
D8		5224015020	DIODE,1SS133T-77 [112RMK2]
D9,10		5224015020	DIODE,1SS133T-77
D11		5224015020	DIODE,1SS133T-77
D12		5224574401	DIODE,ZENER RD7.5EL2 FR
D13		5224016720	DIODE,1SR35-200A FT
D14		5224571801	DIODE,ZENER RD3.0FL2 FR
D15		5224574001	DIODE,ZENER RD6.8EL1 FR
D16,17		5224016720	DIODE,1SR35-200A FT
D18		5224015020	DIODE,1SS133T-77
D19		5224579501	DIODE,ZENER RD33EL2 FR
D20,21		5224015020	DIODE,1SS133T-77
D22		5224573201	DIODE,ZENER RD5.1EL2 FR
D23	⚠	5228010800	SILICON STACK,S2VB10
D25		5224016720	DIODE,1SR35-200A FT
D26-29		5224015020	DIODE,1SS133T-77
D30		5224012920	DIODE,1S2473
D33,34		5224015020	DIODE,1SS133T-77
F1	⚠	5041140000	FUSE,MINI 1A-250V(T) [E,UK,A]
F2,3	⚠	5142185000	FUSE,MINI 630MA/250V(T) [E,UK,A]
P3		5336250100	PLUG,CON. B11B-PH-K-S(WHT)
P5		5336127000	PLUG,CON. 8263-1012(WHT)
P6		5336249700	PLUG,CON. B07B-PH-K-S(WHT)
P8		5336135400	PLUG,CON. 8263-0412(RED)
P9		5336126400	PLUG,CONN. 8263-0412(WHT)
P10		5336126300	PLUG,CONN. 8263-0312(WHT)
P11		5334078300	SOCKET,CON. 25P
P12		5336249200	PLUG,CON. B02B-PH-K-S(WHT)

CONT M PCB ASSY

REF.NO.		PARTS NO.	DESCRIPTION
P18		5327007200	TERMINAL,2P
Q1		5232255720	TR.,DIGI. DTC124ES
Q2,3		5232260900	TR.,ARRAY DT5C124E
Q4,5		5232261500	TR.,ARRAY DT5A143E
Q6		5232260900	TR.,ARRAY DT5C124E [122MK3,112RMK2]
Q7		5230012920	TR.,2SA1015GR
Q8-11		5232255720	TR.,DIGI. DTC124ES
Q12		5232254820	TR.,DIGI. DTA124ES
Q13		5232255720	TR.,DIGI. DTC124ES
Q14		5232256820	TR.,DIGI. DTB143ES
Q15-17		5232255720	TR.,DIGI. DTC124ES
Q18		5230012920	TR.,2SA1015GR
Q19		5231763000	TR.,2SD1380R
Q20-25		5232255720	TR.,DIGI. DTC124ES
Q26		5232255720	TR.,DIGI. DTC124ES [112RMK2]
Q27,28		5232255720	TR.,DIGI. DTC124ES
Q29		5232255720	TR.,DIGI. DTC124ES
Q30,31		5232260900	TR.,ARRAY DT5C124E
R3		5242131200	R.,ARRAY EXB Z06E103J
R10		5241270510	R.,INCOMB. 1.0/1W J FF
R11		5241273310	R.,INCOMB. 15/1W J FF
R18		5242135300	R.,ARRAY RMLS6J103
R19,20		5181978000	R.,INCOMB. F50 15 OHM J
R21		5242135400	R.,ARRAY RMLS9J103
RT1		5228017800	THERMISTOR,S5D-020 [112RMK2,112MK2]
S1	⚠	5300054700	SW.,PUSH SDDLD 1-1
S2		5302110900	SW.,EQV 215 05R
U1		5220833100	MICOM.,UPD75108CW-W63
U2		5220069900	IC.,DIGI. HD74HC138P
U3		5220829200	IC.,M6M80011P
U4		5220108400	IC.,DIGI. M66008P
U5		5220430300	IC.,L78MR05
U6,7		5220444900	IC.,BA6219
U8	⚠	5220434800	IC.,M5F7812L

COUNTER PCB ASSY

REF.NO.	PARTS NO.	DESCRIPTION
	*5200362700	COUNTER PCB ASSY [112RMK2]
	*5200362710	COUNTER PCB ASSY [122MK3]
	*5200362720	COUNTER PCB ASSY [112MK2]
	*5210362700	COUNTER PCB
	*5801500100	HOLDER,FL 134
	*5801579000	SPACER,LH-5 L=9.3
	*5801579100	SPACER,LH-5 L=3.3 [112RMK2]
D1-4	5225018500	LED,SLR-34DU3F
D5,6	5225029300	LED,INDICATOR LD-201MG [112RMK2]

[US]:U.S.A. [E]:EUROPE [UK]:U.K. [C]:CANADA [J]:JAPA
[A]:AUSTRALIA

Parts marked with * require longer delivery time.

COUNTER PCB ASSY

REF.NO.	PARTS NO.	DESCRIPTION
D7,8	5225018500	LED,SLR-34DU3F [122MK3,112RMK2]
D9-11	5224015020	DIODE,1SS133T-77
D12	5224012920	DIODE,1S2473
D13,14	5224015020	DIODE,1SS133T-77
D15,16	5224012920	DIODE,1S2473 [122MK3,112RMK2]
D17	5224015020	DIODE,1SS133T-77 [122MK3,112RMK2]
D18-23	5224015020	DIODE,1SS133T-77
D24	5224012920	DIODE,1S2473
D25	5224015020	DIODE,1SS133T-77
D26	5225018500	LED,SLR-34DU3F [122MK3]
Q1,2	5232255720	TR.,DIGI. DTC124ES
Q3	5232260900	TR.,ARRAY DT5C124E
Q4	5232255720	TR.,DIGI. DTC124ES
S1-9	5302110900	SW.,EQV 215 05R
U1	5347027800	COUNTER,FL 5-BT-137GK

JOINT C PCB ASSY

REF.NO.	PARTS NO.	DESCRIPTION
	*5200362800	JOINT C PCB ASSY
	*5210362800	JOINT C PCB
P1	5336280100	PLUG,CONN. IL-SDD-11P-S2T
P2	5336280200	PLUG,CONN. IL-SDD-12P-S2T

JACK PCB ASSY

REF.NO.	PARTS NO.	DESCRIPTION
	*5200361500	JACK PCB ASSY [112RMK2]
	*5200361510	JACK PCB ASSY [122MK3]
	*5200361520	JACK PCB ASSY [112MK2]
	*5210361501	JACK PCB [122MK3,112RMK2]
	*5210364801	JACK PCB [112MK2]
J101,102	5330017600	JACK,FJ316DNNB-Z
J103	5330017700	JACK,SINGLE FJ332DB-Z
P1,2	5336398100	PLUG,CONN. 10P-FJ
P3	5336398500	PLUG,CONN. 14P-FJ
R101,201	5282026500	VR.,,10KB 1S1UVR [122MK3]
R102,202	5282026500	VR.,,10KB 1S1UVR [122MK3]
R103	5282420300	VR.,,10KAX2 1S2UVR 09
S101	5300916700	SW.,SLIDE 2-3 SSSU
S102,103	5300917000	SW.,SLIDE 2-2

VR PCB ASSY

REF.NO.	PARTS NO.	DESCRIPTION
	*5200361400	VR PCB ASSY [112RMK2,122MK3]
	*5210361400	VR PCB [112RMK2,122MK3]
	*5200361420	VR PCB ASSY [112MK2]
	*5210364700	VR PCB [112MK2]
	5801567500	HOLDER,R VOL
J1	5336281900	SOCKET,CONN. IL-SDD-9S-S2L2
R101,201	5282026400	VR.,20KA 1S1UVR 16
R102	5282411600	VR.,10KAX2 1S2UVR 16

METER AMP PCB ASSY

REF.NO.	PARTS NO.	DESCRIPTION
	*5200362600	METER AMP PCB ASSY [112RMK2,112MK2]
	*5200362610	METER AMP PCB ASSY [112RMK2,112MK2]
	*5210362600	METER AMP PCB
D101,201	5224015400	DIODE,1K60
D102,202	5224015400	DIODE,1K60
D104,204	5224012920	DIODE,1S2473
J1	5336281900	SOCKET,CONN. IL-SDD-9S-S2L2
P1	5336280500	PLUG,CONN. IL-SDD-15P-S2T
P2	5336279900	PLUG,CONN. IL-SDD-9P-S2T
Q101,201	5230780920	TR.,2SC2603F
Q102,202	5232255720	TR.,DIGI. DTC124ES [122MK3]
R104,204	5280036100	R.,TRIMMER 4.7KB
U101,102	5220440600	IC.,NJM4565L

P.CONT PCB ASSY

REF.NO.	PARTS NO.	DESCRIPTION
	*5200362100	P.CONT PCB ASSY [112RMK2]
	*5210362100	P.CONT PCB [112RMK2]
	*5200362110	P.CONT PCB ASSY [122MK3]
	*5200362120	P.CONT PCB ASSY [112MK2]
	*5210362101	P.CONT PCB [122MK3,112RMK2]
R1,2	5280035700	R.,TRIMMER 1KB [112RMK2,112MK2]
	5280036100	R.,TRIMMER 4.7KB [122MK3]
R4	5282026700	VR.,1KB 1S1UVR 11 [112RMK2,112MK2]
	5282026600	VR.,10KB 1S1UVR [122MK3]
S1	5301207400	SW.,ROTARY 2-2

Parts marked with * require longer delivery time.

JOINT M PCB ASSY

REF.NO.	PARTS NO.	DESCRIPTION
	*5200362500	JOINT M PCB ASSY
	*5210362500	JOINT M PCB
P1	5336279900	PLUG,CONN. IL-SDD-9P-S2T

BAL AMP PCB ASSY [122MK3]

REF.NO.	PARTS NO.	DESCRIPTION
	*5200363000	BAL AMP PCB ASSY
	*5210363000	BAL AMP PCB
J101,201	5334042200	SOCKET,CANNON CONN. XLB3-31
J102,202	5334042100	PLUG,CANNON CONN. XLB3-32
Q101	5231763000	TR.,2SD1380 R
Q102	5231763600	TR.,2SB1009 R
S101	5300917000	SW.,SLIDE 2-2
U101	5220439500	IC.,UPC4570HA
U102,202	5242127700	R,ARRAY RMNZ8 618
U103,203	5220431100	IC.,NJM5532S

CONT S PCB ASSY

REF.NO.	PARTS NO.	DESCRIPTION
	*5200362000	CONT S PCB ASSY [112RMK2]
	*5200362010	CONT S PCB ASSY [122MK3]
	*5200362020	CONT S PCB ASSY [112MK2]
	*5210362001	CONT S PCB
D1-3	5224015020	DIODE,1SS133T-77 [112RMK2]
D4	5224015020	DIODE,1SS133T-77 [122MK3,112RMK2]
D5,6	5224015020	DIODE,1SS133T-77 [112RMK2]
J1	5336282100	SOCKET,CON. IL-SDD-11S-S2L2
J2	5336282200	SOCKET,CON. IL-SDD-12S-S2L2
J3-6	5336401200	CONNECTOR,TFC-B08Y-E1
P1	5336137800	PLUG,CONN. 8263-0812(BLK)
Q1	5232261700	TR.,DIGI. DTB143EV-TV2
Q2	5232255720	TR.,DIGI. DTC124ES
Q3	5232254820	TR.,DIGI. DTA124ES
Q4	5232260800	TR.,ARRAY DT5A124E
Q5	5230780920	TR.,2SC2603F [122MK3,112RMK2]
Q6	5231763000	TR.,2SD1380R [112RMK2]
Q7	5231763000	TR.,2SD1380R [122MK3,112RMK2]
Q8,9	5232255720	TR.,DIGI. DTC124ES [112RMK2]
Q10,11	5232254820	TR.,DIGI. DTA124ES [112RMK2]
Q12	5232008420	FET.,2SK381D [112RMK2]
Q13	5232255720	TR.,DIGI. DTC124ES [112RMK2]
R8	5280041300	R.,TRIMMER 2.2KB [112RMK2]
R9	5280041300	R.,TRIMMER 2.2KB

CONT S PCB ASSY

REF.NO.	PARTS NO.	DESCRIPTION
R26	5280042100	R.,TRIMMER 47KB [112RMK2]
R53	5242130100	R.,ARRAY EXB Z05E472J
U1	5232253300	TR.,ARRAY LB1240
U2	5220426300	IC.,BA6993 [112RMK2]
U3	5220426300	IC.,BA6993
U4	5220426300	IC.,BA6993 [122MK3,112RMK2]

METER PCB ASSY

REF.NO.	PARTS NO.	DESCRIPTION
	*5200362400	METER PCB ASSY
	*5210362400	METER PCB
	5800385100	SPACER,LED
D101,201	5225013500	LED,SLR-34VR3F(RED)

OP SW PCB ASSY

REF.NO.	PARTS NO.	DESCRIPTION
	*5200362200	OP SW PCB ASSY
	*5210362201	OP SW PCB
	5801501301	SPACER,LED L=4.1
D1,2	5224017820	DIODE,MA165P-TA5
D5,6	5224017820	DIODE,MA165P-TA5
D7	5225013600	LED,SLR-34MG3F(GRN)
D8	5225018500	LED,SLR-34DU3F
D9	5225013500	LED,SLR-34VR3F(RED)
S1,2	5302112100	SW.,EVQ-235
S3-5	3302110900	SW.,EQV 215 05R
S6	5302112100	SW.,EVQ-235

SW(E) PCB ASSY [122MK3,112RMK2]

REF.NO.	PARTS NO.	DESCRIPTION
	*5200363500	SW(E) PCB ASSY [112RMK2]
	*5200363510	SW(E) PCB ASSY [122MK3]
	*5210363500	SW(E) PCB
	*5334083000	PLUG,CONN. B03B-ZR(WHT) [112RMK2]
S1-5	5301754500	SW.,LEAF MTS101611MVJO

Parts marked with * require longer delivery time.

SW PCB ASSY [112MK2]

REF.NO.	PARTS NO.	DESCRIPTION
	*5200333900	SW PCB ASSY
	*5210333901	SW PCB
S1	5301754500	SW.,LEAF MTS1016IMVJ0
S3-5	5301754500	SW.,LEAF MTS1016IMVJ0

SW(R) PCB ASSY [112RMK2]

REF.NO.	PARTS NO.	DESCRIPTION
	*5200363200	SW(R) PCB ASSY
	*5210363200	SW(R) PCB
S1	5301654100	SW.,D2A

SENSOR(R) PCB ASSY [122MK3,112RMK2]

REF.NO.	PARTS NO.	DESCRIPTION
	*5200363300	SENSOR(R) PCB ASSY [112RMK2]
	*5200363310	SENSOR(R) PCB ASSY [122MK3]
	*5210363300	SENSOR(R) PCB
D1	5224017120	DIODE,1SR139-200 T-31
D2	5224017120	DIODE,1SR139-200 T-31 [112RMK2]
Q1-4	5228017200	PHOTO REF.,NJL5161KF1-B

SENSOR PCB ASSY [112MK2]

REF.NO.	PARTS NO.	DESCRIPTION
	*5200343210	SENSOR PCB ASSY
	*5210333802	SENSOR PCB
Q1,2	5228017200	PHOTO REF.,NJL5161KF1-B

Parts marked with * require longer delivery time.

6. BLOCK DIAGRAMS

ブロック・ダイアグラム

122MKIII

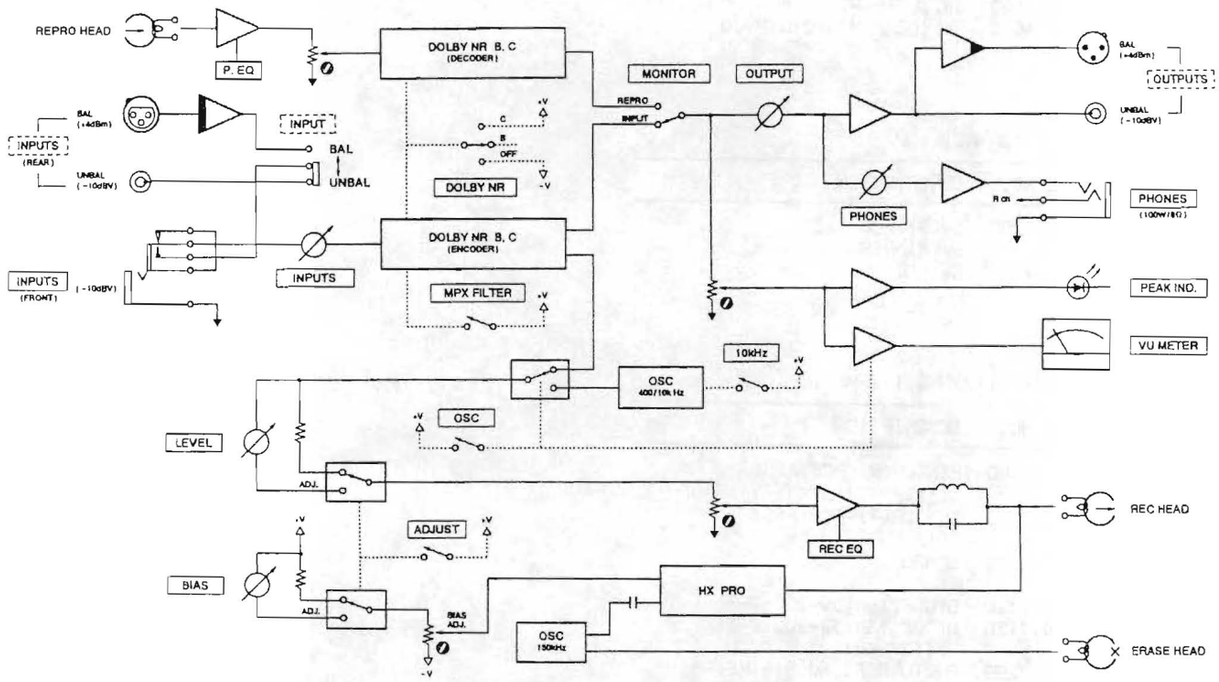

112RMKII

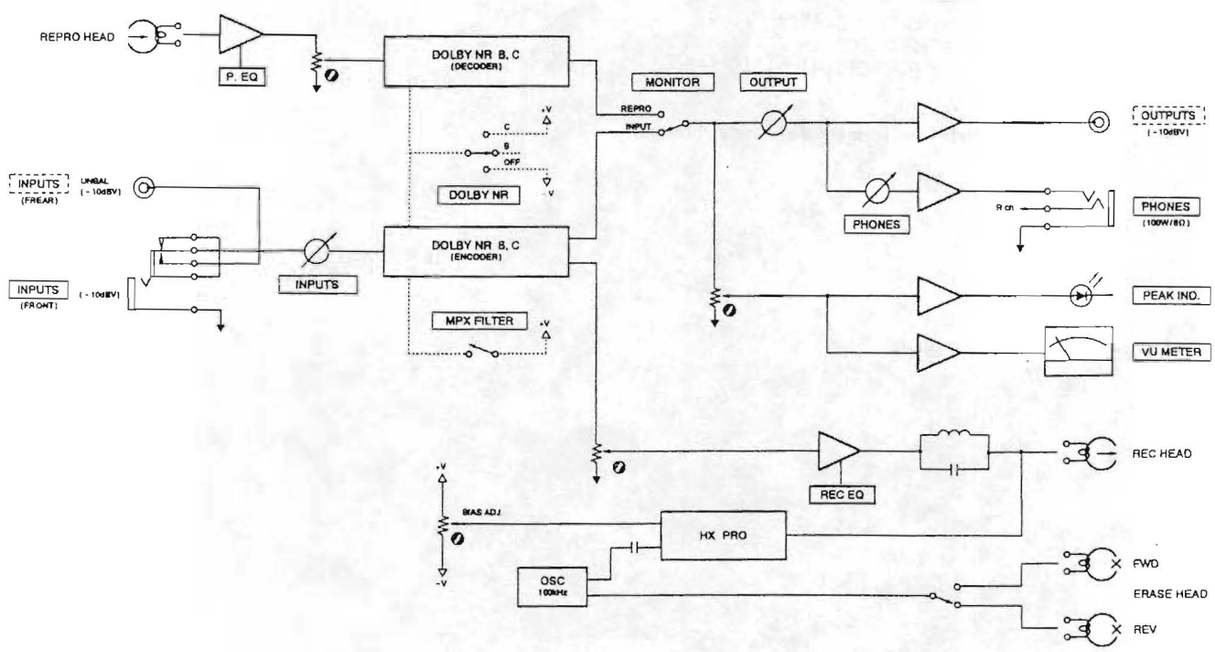

112MKII

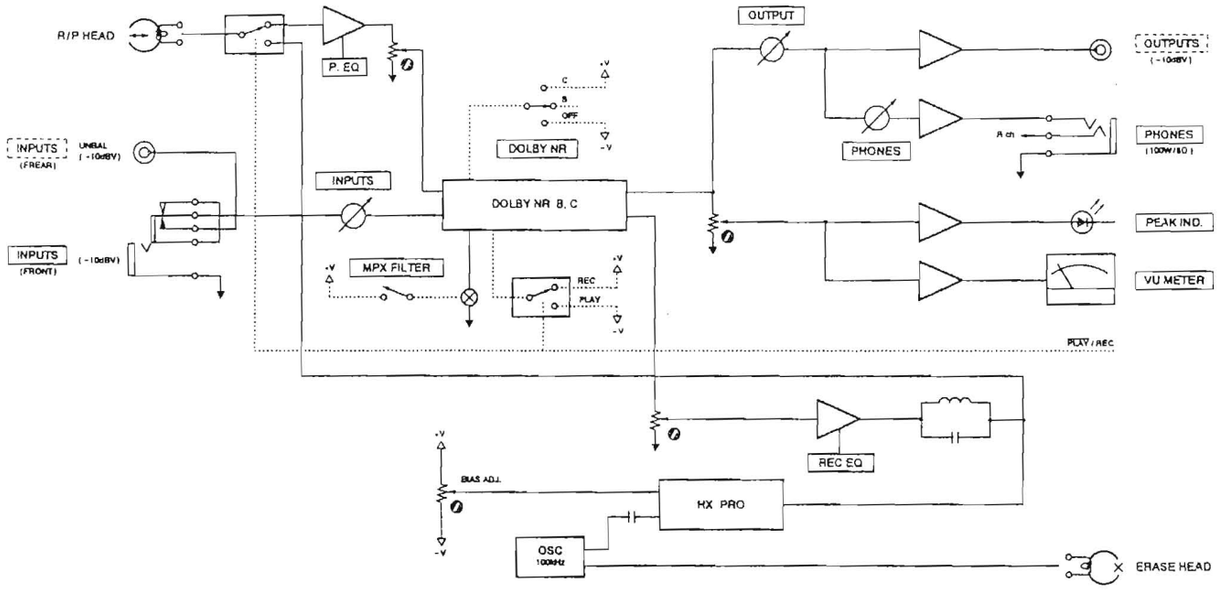
R/P HEAD
P. EQ
INPUTS
(REAR)
UNBAL
(-10dBV)
INPUTS
(FRONT)
(-10dBV)
INPUTS
MPX FILTER
DOLBY NR
C
B
OFF
-V
DOLBY NR B. C
REC
PLAY
OUTPUT
PHONES
R ch
OUTPUTS
(-10dBV)
PHONES
(100W/8Ω)
PEAK IND.
VU METER
PLAY / REC
REC EQ
BIAS ADJ.
HX PRO
OSC
100kHz
ERASE HEAD

122MKⅢ/112RMKⅡ/112MKⅡ

TASCAM
TEAC Professional Division

ティアック株式会社	営業部	☎ (0422) 52-5072	〒180 東京都武蔵野市中町1－19－18	武蔵野センタービル
技術的なお問合わせ	AV技術相談室	☎ (0425) 60-7761	〒208 東京都武蔵村山市伊奈平2－11－1	
サービスに関するお問合わせは、最寄りの営業所等へご連絡ください。営業所にはサービス・センターが併設されています。	札幌営業所	☎ (011) 521-4101(代)	〒064 札幌市中央区南7条西2－2	くぼたビル
	仙台営業所	☎ (022) 227-1501(代)	〒980 仙台市青葉区1番町2－5－5	中央ビル
	新潟サービス	☎ (025) 245-0103	〒950 新潟県新潟市本馬越1－4－11	黒井ハイツ
	大宮サービス	☎ (048) 642-4551(代)	〒330 大宮市三橋2－8－46	
	多摩サービス	☎ (0425) 60-8918	〒208 東京都武蔵村山市伊奈平2－11－1	
	ﾀｽｶﾑ東京営業所	☎ (03) 3592-2051(代)	〒100 東京都千代田区永田町2－10－7	星ガ岡会館
	千葉サービス	☎ (043) 255-1281	〒260 千葉市中央区椿森1－21－13	清水ビル
	西関東営業所	☎ (0427) 51-6771	〒229 相模原市千代田1－3－1	MIビル
	静岡サービス	☎ (054) 238-2431	〒422 静岡市高松1－12－1	薄道ハイツ105号
	名古屋営業所	☎ (052) 702-3100(代)	〒465 名古屋市名東区上社5－406	
	京都サービス	☎ (075) 871-8730(代)	〒616 京都市右京区常盤窪町19	西垣ビル
	大阪営業所	☎ (06) 384-5201(代)	〒564 吹田市垂水町3－34－10	
	岡山サービス	☎ (0862) 25-8601	〒700 岡山市新保1142－6	
	広島営業所	☎ (082) 294-4751(代)	〒730 広島市中区西川口町13－19	
	福岡営業所	☎ (092) 431-5781(代)	〒812 福岡市博多区東光2－2－24	
	福岡サービス	☎ (092) 936-5672	〒811-22 福岡県粕屋郡志免町志免1041	
	サービス1課	☎ (0425) 60-8918	〒208 東京都武蔵村山市伊奈平2－11－1	

TEAC CORPORATION	Musashino Center Bldg.,1-19-18, Nakacho, Musashino-shi, Tokyo 180, Japan	Phone:(0422)52-5081
TEAC AMERICA, INC.	7733 Telegraph Road, Montebello, California 90640	Phone:(213)726-0303
TEAC CANADA LTD.	340 Brunel Road, Mississauga, Ontario L4Z 2C2, Canada	Phone:416-890-8008
TEAC UK LIMITED	5 Marlin House, Marlins Meadow, The Croxley Centre, Watford, Herts. WD1 8YA, U.K.	Phone:0923-819631
TEAC DEUTSCHLAND GmbH	Bahnstrasse 12, 65205 Wiesbaden-Erbenheim, Germany	Phone:0611-71580
TEAC FRANCE S.A.	17, Rue Alexis-de-Tocqueville, CE 005 92182 Antony Cedex, France	Phone:(1)42.37.01.02
TEAC BELGIUM NV/SA	143C Woluwelaan, 1831 Machelen-Diegem, Belgium	Phone:(02)725-6555
TEAC NEDERLAND BV	Perkinsbaan 11, 3439 ND Nieuwegein, Nederland	Phone:03-402-30229
TEAC AUSTRALIA PTY., LTD. A.C.N. 005 408 462	106 Bay Street, Port Melborne, Victoria 3207, Australia	Phone:(03)646-1733
TEAC ITALIANA S.p.A.	Via C. Cantù 5, 20092 Cinisello Balsamo, Milano, Italy	Phone:02-66010500

PRINTED IN JAPAN 0993U 0.65 M-0869A