# TASCAM

TEAC Professional Division

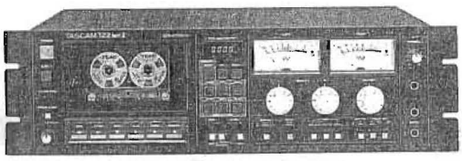

## SERVICE MANUAL

# 122MKII

## Master Cassette Deck

Effective: March, 1987 B10124

5704035900

# TABLE OF CONTENTS

# 目　次


1. Specifications ····· 2
   Block Diagram ····· 3
2. Removal of External Components ····· 4
3. Parts Location ····· 5
4. Test Equipment／Material and Precautions
   4－1 Equipment Required for Maintenance ····· 7
   4－2 Precautions ····· 8
5. Mechanical Checks and Adjustments
   5－1 Micro Switch ····· 11
   5－2 Head Hight, Tilt and Azimuth ····· 11
   5－3 Head Base Position ····· 12
   5－4 Pinch Roller Pressure ····· 15
   5－5 Reel Torque ····· 15
   5－6 Tape Speed ····· 16
   5－7 Wow and Flutter ····· 17
   5－8 Cassette Holder ····· 17
   5－9 Damper Adjustment ····· 18
   5－10 Voltage Conversion ····· 18
6. Electrical Checks and Adjustments
   6－1 Playback Performance ····· 21
   6－2 Monitor Performance ····· 22
   6－3 Recording Performance ····· 23
7. Exploded Views and Parts Lists ····· 25
8. PC Boards and Parts Lists ····· 34
9. IC Internal Block Diagrams ····· 44
Schematic's ····· Insert

1. 仕様 ····· 2
   ブロック・ダイヤグラム ····· 3
2. 外装部品の外し方 ····· 4
3. 部品配置図 ····· 5
4. メンテナンス主要器材と諸条件
   4－1.メンテナンス主要器材 ····· 9
   4－2. メンテナンス諸条件 ····· 10
5. 機構部のチェックと調整
   5－1. マイクロスイッチ ····· 11
   5－2. ヘッドの高さ、チルト、アジマス ····· 11
   5－3. ヘッドベース位置 ····· 12
   5－4. ピンチ・ローラ圧着力 ····· 15
   5－5.リール・トルク ····· 15
   5－6. テープ速度 ····· 16
   5－7. ワウ・フラッタ ····· 17
   5－8. カセット・ホルダ ····· 17
   5－9. ダンパ調整 ····· 18
   5－10. 電圧変換 ····· 18
6. 録音再生アンプ部のチェックと調整
   6－1. 再生系 ····· 21
   6－2. モニタ系 ····· 22
   6－3. 録音系 ····· 23
7. 分解図とパーツ・リスト ····· 25
8. 基板図とパーツ・リスト ····· 34
9. ICブロック・ダイヤグラム ····· 44
回路図 ····· 投げ込み

# 1. SPECIFICATIONS
## 仕様

| | |
|---|---|
| **MECHANICAL** | |
| Tape: | Philips type cassette C-60 and C-90 |
| Track Format: | 4-track, 2-channel stereo |
| Tape Speed: | 4.8 cm/s (1-7/8" ips) |
| Speed Accuracy: | ±0.5 % |
| Pitch Control: | ±12 % |
| Wow & Flutter[1]: | 0.04 % (NAB weighted) |
| | ±0.08 % peak (DIN/IEC/ANSI weighted) |
| Fast Wind Time: | 90 seconds for C-60 |
| Motor: | 1 FG servo direct-drive capstan motor; |
| | 1 DC reel motor; and 1 DC ancillary |
| Head Configuration: | 3 heads; erase, playback and record |
| Dimentions (W x H x D): | 482 x 133 x 297 mm (19" x 5-1/4" x 11-11/16") |
| Weight: | 7.7 kg (16.94 lbs) net |
| **ELECTRICAL** | |
| Line Input (XLR) | |
| Input Impedance: | 40 k ohms, balanced |
| Nominal Input Level: | +4 dBm (1.23 V) |
| Minimum Input Level: | -4 dBm (0.49 V) |
| Line Input (1/4" and RCA) | |
| Input Impedance: | 30 k ohms, unbalanced |
| Nominal Input Level: | -10 dBV (0.3 V) |
| Minimum Input Level: | -18 dBV (126 mV) |
| Line Output (XLR) | |
| Minimum Load Impedance: | 10 k ohms or more, balanced |
| Output Impedance: | 100 ohms |
| Nominal Output Level: | +4 dBm (1.23 V) |
| Maximum Output Level: | +12 dBm (3.1 V) |
| Line Output (RCA) | |
| Minimum Load Impedance: | 10 k ohms or more, unbalanced |
| Output Impedance: | 100 ohms |
| Nominal Output Level: | -10 dBV (0.3 V) |
| Maximum Output Level: | -2 dBV (0.8 V) |
| Headphone Output: | 100 mW/channel maximum at 8 ohms |
| Bias Frequency | 100 kHz |
| Equalization: | 3180 $\mu$s + 70 $\mu$s (Metal, $CrO_2$) |
| | 3180 $\mu$s + 120 $\mu$s (Normal) |
| Recording Level: | 160 nWb/m (0 VU) |
| Frequency Response[2]: | 25 Hz – 20 kHz ±3 dB at -20 VU (Metal) |
| | 25 Hz – 19 kHz ±3 dB at -20 VU ($CrO_2$) |
| | 25 Hz – 17 kHz ±3 dB at -20 VU (Normal) |
| Total Harmonic Distortion (THD)[2]: | 1 % at 0 VU, 400 Hz, 160 nWb/m (Metal) |
| Signal-to-Noise Ratio[2]: | 59 dB (NR OUT, WTD) |
| (Reference 3 % THD) | 68 dB (DOLBY*-B NR IN, over 5 kHz) |
| | 78 dB (DOLBY-C NR IN, over 1 kHz) |
| Adjacent Channel Separation[2]: | Better than 45 dB at 1 kHz |
| Erasure[2]: | Better than 65 dB at 1 kHz reference +10 VU |
| Power Requirements: | |
| U.S.A./CANADA: | 120 V AC, 60 Hz |
| EUROPE: | 220 V AC, 50 Hz |
| U.K./AUSTRALIA: | 240 V AC, 50 Hz |
| GENERAL EXPORT: | 100/120/220/240 V AC, 50/60 Hz |
| Power Consumption: | 24 W |

In these specifications, 0 dBV is referenced to 1.0 Volt. Actual voltage levels are also given in parenthesis. To calculate the 0 dB = 0.775 Volt reference level (i.e., 0 dBm in a 600-ohm circuit), add 2.2 dB to the listed dB value; i.e., -10 dB re: 1 V = -7.8 dB re: 0.775 V.

1) Specifications were determined using TEAC Test Tape MTT-111

2) Specifications were determined using TEAC Test Tape

| | |
|---|---|
| METAL | MTT-5571 |
| $CrO_2$ | MTT-5561 |
| NORMAL | MTT-5511 |

基準レベルは0dBV＝1V, 0dBm＝0.775Vで実際の電圧も（ ）で示しています。
0dBm＝0.775V基準レベルと0dB＝1V基準レベルとは2.2dBの差があります。
1)：この項の仕様は、テスト・テープTEAC MTT－111によります。
2)：この項の仕様のテスト・テープは

| | |
|---|---|
| METAL | MTT－5571 |
| NORMAL | MTT－5511 |
| CrO2 | MTT－5561 |

☆ 仕様及び外観は改善のため予告なく変更することがあります。
☆ ドルビーノイズリダクションシステムは、ドルビー研究所からの実施権に基き製造されています。
☆ ドルビー及び DD は、ドルビー研究所の登録商標です。

Changes in specifications and features may be made without notice or obligation.
*Dolby noise reduction manufactured under license from Dolby Laboratories Licensing Corporation.
"DOLBY" and the double-D symbol DD are trademarks of Dolby Laboratories Licensing Corporation.

## Block Diagram

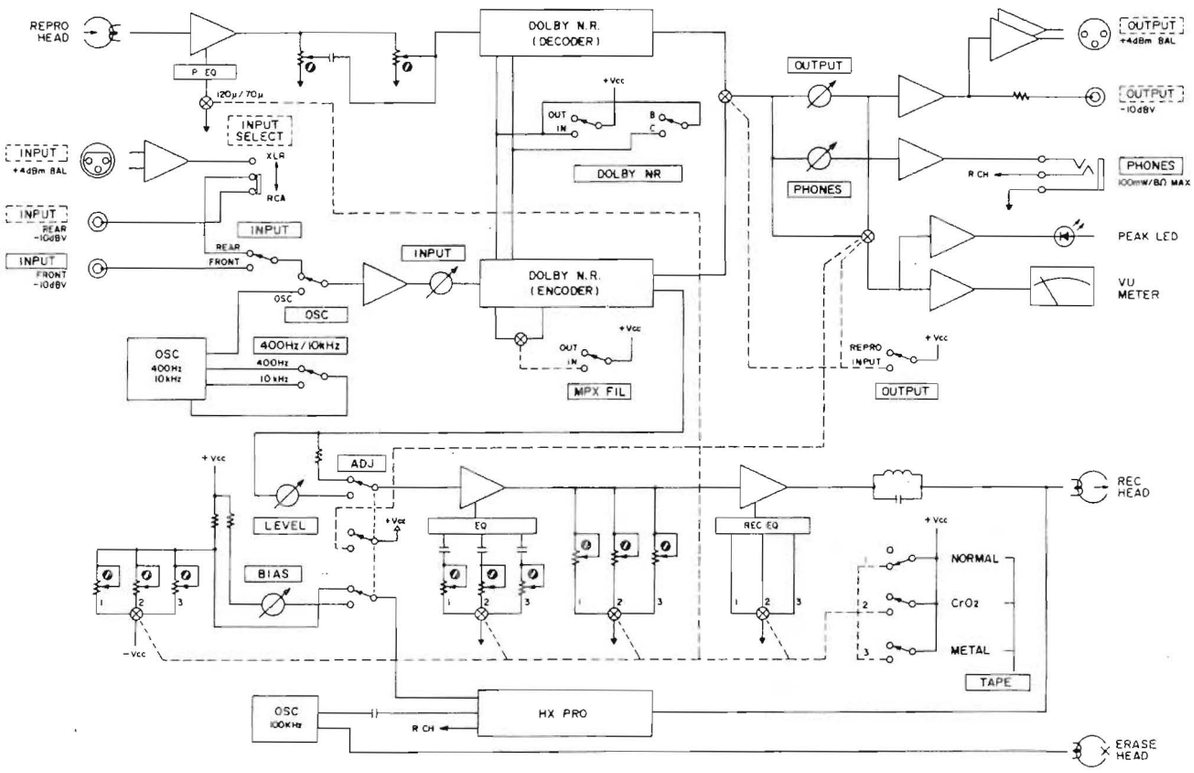


## External Dimensions

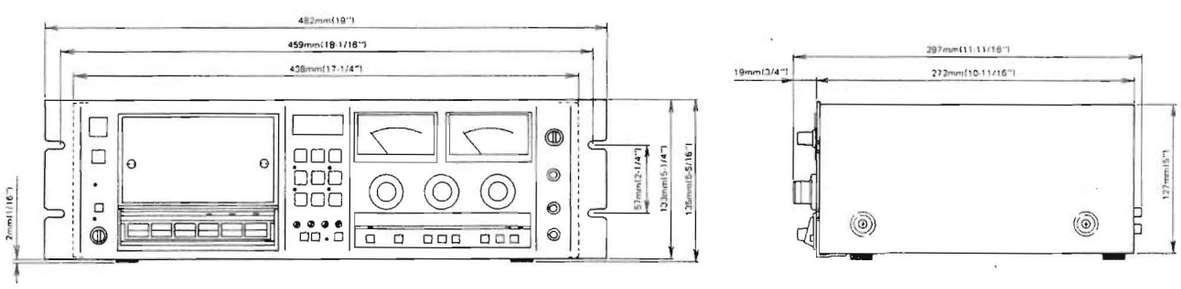

# 2 REMOVAL OF EXTERNAL COMPONENTS

外装部品の外し方

Disassemble in number-order
番号順に外して下さい

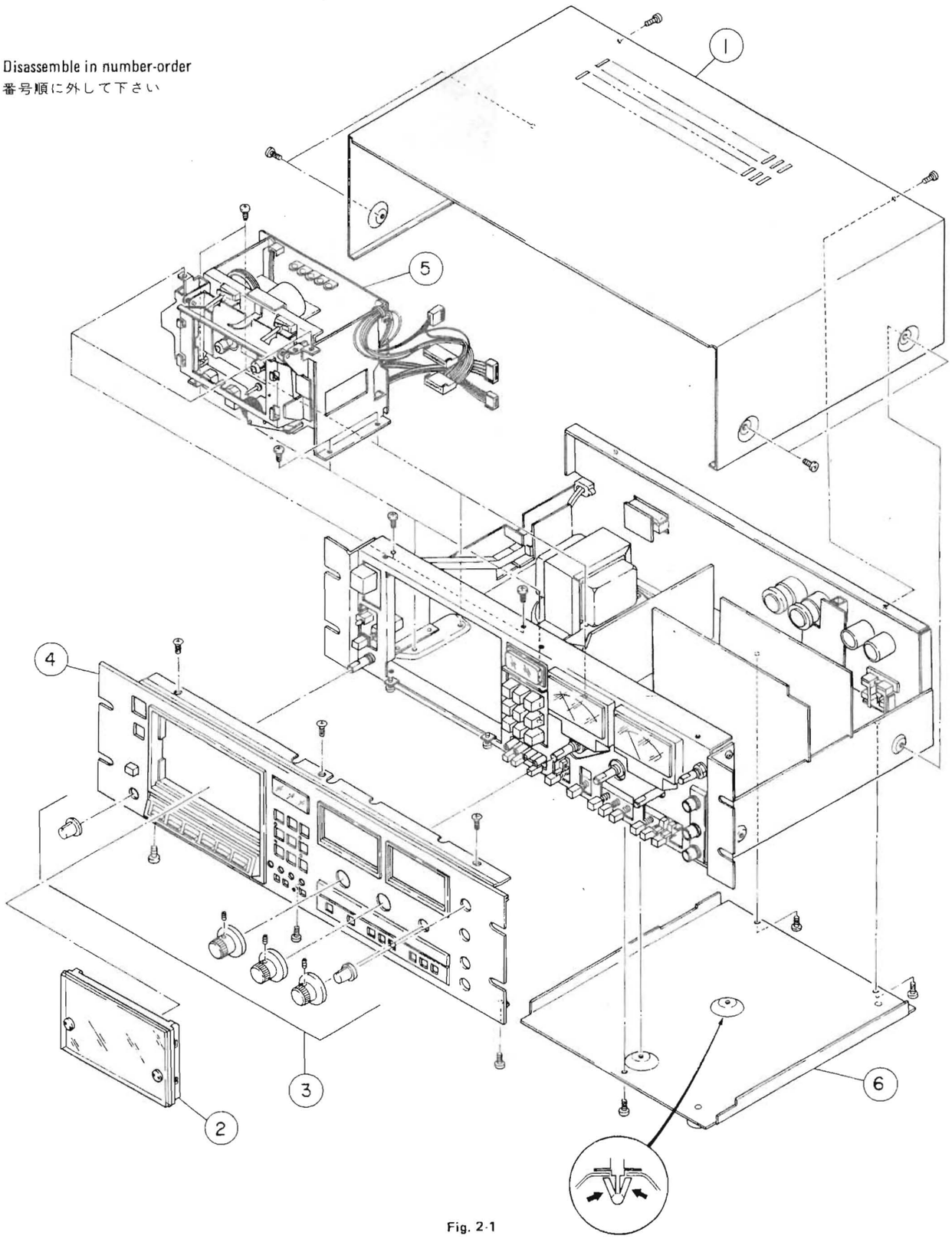


Fig. 2-1

# 3 PARTS LOCATION
部品配置図

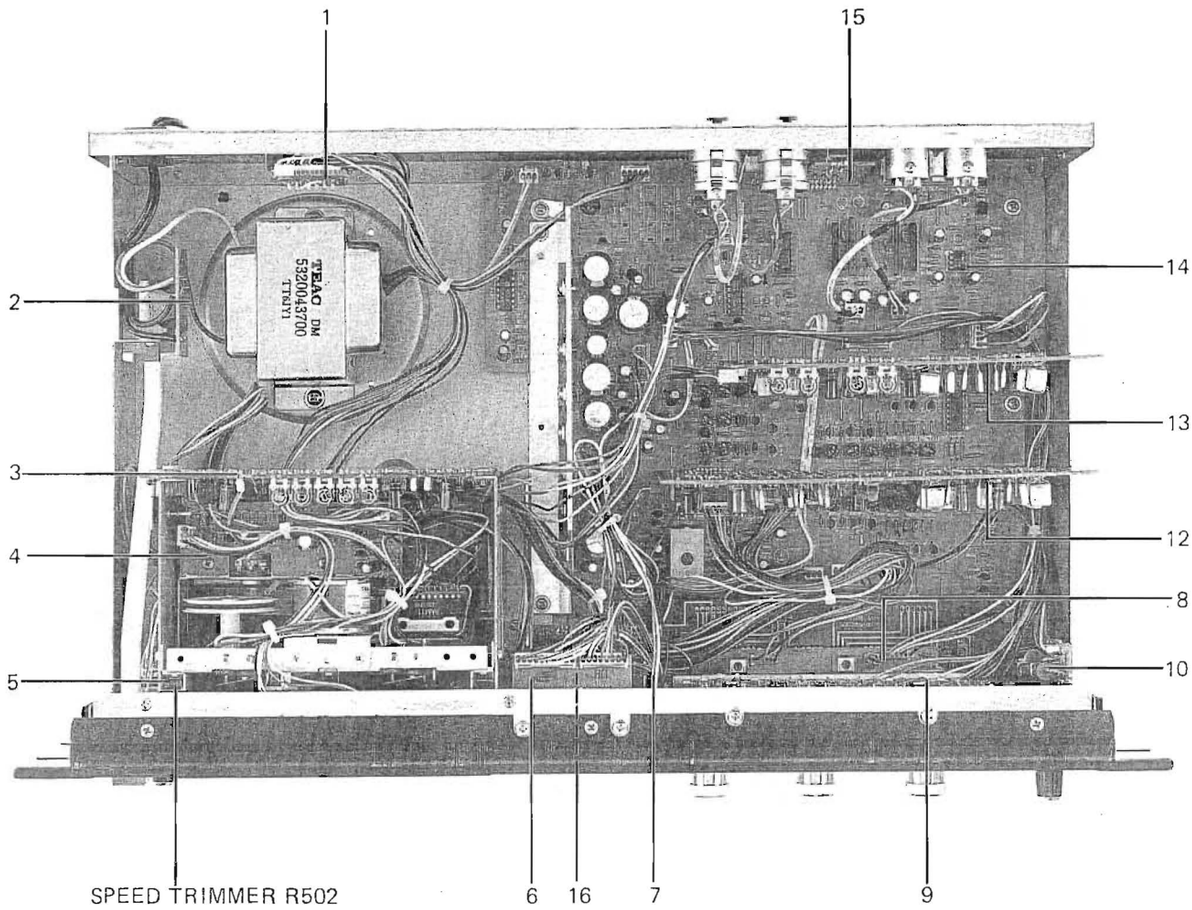


| | | | |
|---|---|---|---|
| 1 | REMOCON PCB ASSY | 9 | METER PCB ASSY |
| 2 | POWER SW PCB ASSY | 10 | H. PHONE PCB ASSY |
| 3 | CONTROL PCB ASSY | 11 | MONITOR SW PCB ASSY |
| 4 | B. T CONTROL PCB ASSY | 12 | REC AMP PCB ASSY |
| 5 | PITCH CON PCB ASSY | 13 | PLAY AMP PCB ASSY |
| 6 | COUNTER PCB ASSY | 14 | MOTHER PCB ASSY |
| 7 | COUNTER SW PCB ASSY | 15 | BAL. AMP PCB ASSY |
| 8 | VR PCB ASSY | 16 | JOINT PCB ASSY, ADJ SW PCB ASSY |

Fig. 3-1 Top view
上面図

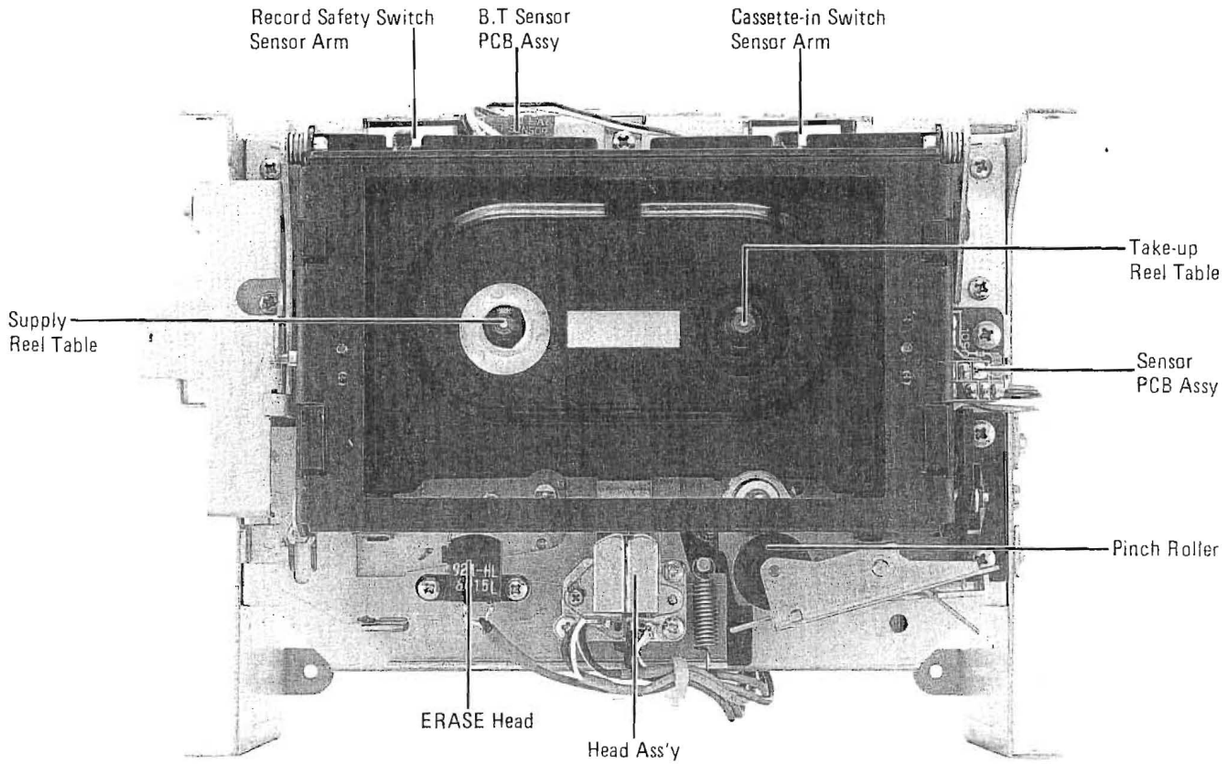
Record Safety Switch
Sensor Arm
B.T Sensor
PCB Assy
Cassette-in Switch
Sensor Arm
Take-up
Reel Table
Supply
Reel Table
Sensor
PCB Assy
Pinch Roller
ERASE Head
Head Ass'y

Fig. 3-2

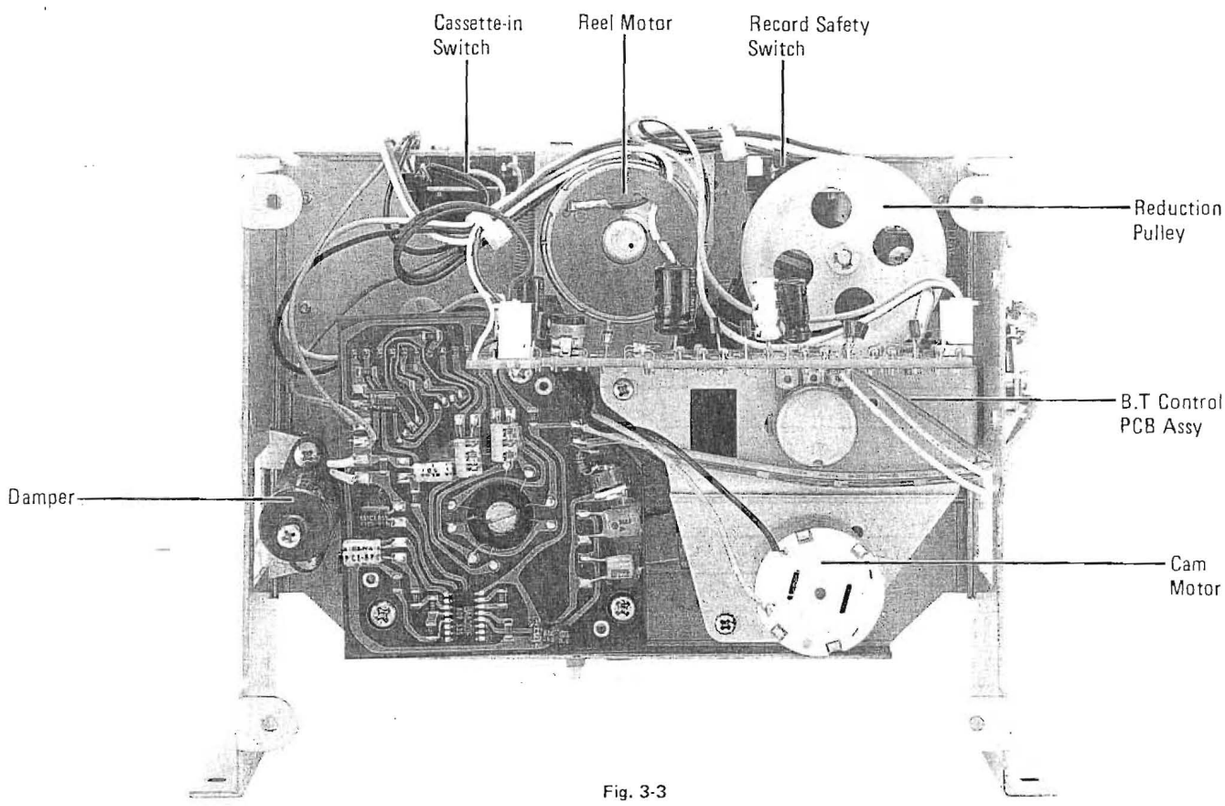
Cassette-in
Switch
Reel Motor
Record Safety
Switch
Reduction
Pulley
B.T Control
PCB Assy
Damper
Cam
Motor

Fig. 3-3

# 4. TEST EQUIPMENT/MATERIAL AND PRECAUTIONS

## 4-1. EQUIPMENT REQUIRED FOR MAINTENANCE

| Equipment/Material (Suggested Type) | | Used for |
|---|---|---|
| Cleaner | TEAC TZ-261A (Head Cleaner) or equivalent | Cleaning heads and other meal components in tape path |
| | TEAC TZ-261B (Rubber Cleaner) | Cleaning pinch collers |
| Head Demagnetizer | TEAC E-3 or equivalent | Demagnetizing heads |
| Screwdriver | Non inductive (plastique, wood) | Bias tuning |
| Spring Scale | 0 – 500 g | Pinch roller pressure measurement |
| Head Alignment Jig | Jig A, TEAC Part No. 5736006600<br>Jig B, TEAC Part No. 5736006700 | Head height checks (longitudinal and horizontal) |
| Torque Meter | Cassette torque meter<br>0 – 100 g-cm (Sony model TW2111/2121)<br>0 – 160 g-cm (Sony model TW2231) | Reel torque measurement |
| Wow/Flutter Meter | General use type<br>Range: 0.03 %<br>Sensitivity: 10 mV or more<br>Available positions: NAB, DIN/CCIR; WTD/UNWTD | Wow and Flutter measurements |
| Frequency Counter | General use type<br>Sensitivity: 25 mV or more<br>Impedance: 1 M ohms or more<br>Range: 1 Hz – 10 MHz | Tape speed measurement, Wow/flutter measurement, and Bias frequency measurement |
| DC Voltmeter | General use type<br>Digital or analog<br>Sensitivity: 0.1 V or more | DC voltage measurements |
| AC Level Meter | General use type<br>Level range: -80 dB – +40 dB<br>Impedance: 1 M ohms or more, less than 25 pF<br>Frequency range: 30 kHz or more | Signal level measurements and bias adjsutments |
| Oscillator | Available frequencies: 10 Hz – 1 MHz<br>Output level: 3 V or more/600 ohms (variable)<br>Distortion: less than 0.1 % | Test signal generation |
| Attenuator | General use type<br>Attenuation: 100 dB or more<br>Steps: 0.1 dB<br>Impedance: 600 ohms | Input level settings |
| Oscilloscope | General use type (2 channel)<br>Sensitivity: 20 mV/DIV or more<br>Sweep rate: 1 μsec/DIV or more | Head azimuth adjustment |
| Distortion Meter | General use type<br>Frequency: 400 Hz, 1 kHz<br>Sensitivity: 10 mV or more<br>Scale range: 0.1 % or wider | Output distortion check |
| Band-pass Filter | General use type<br>Passing band width: 1 kHz (±10 %), 30 dB or more/octave<br>Weighting: IHF | Erasure and Crosstalk measurements |

| Equipment/Material (Suggested Type) | | Used for |
|---|---|---|
| Test Tapes | TEAC MTT-111 (Part No. 4900010100) | Tape speed and wow/flutter measurements |
| | TEAC MTT-150 (Part No. 4900011100) (Dolby-B type) | Output level adjustment |
| | TEAC MTT-256 (Part No. 490005090)<br>DIN reference level<br>Time constant 3180 + 120 μ sec.<br>31.5Hz~14kHz | Head azimuth and Frequency response adjustment |
| Blank Tapes | TEAC MTT-5511 (Part No. 4900041700) (NORMAL) | Test signal recordings and others |
| | TEAC MTT-5561 (Part No. 4900041900) (CrO2) | |
| | TEAC MTT-5571 (Part No. 4900042000) (METAL) | |
| Mirror Tape | TEAC MTT-902 (Part No. 4900015200) | Tape travel check |

## 4-2. PRECAUTIONS

1. Before making any electrical checks and adjustments, be sure to clean and demagnetize each head and tape path; and also make sure that the tape runs smoothly.
2. Repeat checks and adjustments for L and R channels in this order except otherwise specified.
   **Note:** Adjustment pot numbers indicated as R00/R00 refer
3. to channel L and channel R circuitries, respectively.
   In this manual, 0.dBV is referenced to 1.0 V.

# 4.メンテナンス主要器材と諸条件

## 4－1　メンテナンス主要器材

| 機　　材（指定品） | | 目　　的 |
|---|---|---|
| クリーニング液 | TEAC TZ-261A液（ヘッドクリーナ）および同等品 | ヘッド，テープ・ガイド面のクリーニング |
| | TEAC TZ-261B液（ラバー・クリーナ）および同等品 | ピンチ・ローラのクリーニング |
| ヘッド・イレーサ | TEAC E-3および同等品 | ヘッド・テープ・ガイドの消磁 |
| ドライバー | 無誘導性（プラスチック，木製） | バイアス・チューニング |
| ばね秤 | 0～500g | ピンチ・ローラ圧着測定 |
| ヘッド高さ調整用治具 | 治具A（品番5736006600）<br>治具B（品番5736006700） | ヘッドの高さ，位置測定 |
| トルク・メータ | カセット・トルク・メータ<br>0～100g-cm（ソニー製 TW2111,2121）<br>0～160g-cm（ソニー製 TW2231） | リール・トルク |
| ワウ・フラッタ・メータ | 一般用<br>レンジ：0.03%～<br>感度：10mV以上<br>特性：JIS，NAB，DIN/CCIR<br>WTD/UNWTD | ワウ・フラッタ測定 |
| 周波数・カウンター | 一般用<br>感度：25mV以上<br>インピーダンス：1MΩ以上<br>測定周波数：1Hz～10MHz | テープ・スピード測定<br>ワウ・フラッタ測定<br>バイアス発振周波数測定 |
| 直流電圧計 | 一般用<br>デジタルまたはアナログ式<br>感度：0.1V以上 | 電圧測定 |
| AC・レベル計 | 一般用<br>レンジ：－80dB～＋40dB<br>インピーダンス：1MΩ以上，25pF以下<br>周波数帯域：30kHz以上 | 信号レベル測定<br>バイアス調整 |
| オーディオ発振器 | 周波数：10Hz～1MHz<br>出力レベル：3V以上/600Ω（可変）<br>ひずみ率：0.1%以下 | 入力信号 |
| アッテネータ | 一般用<br>減衰量：100dB以上<br>ステップ：0.1dB<br>インピーダンス：600Ω | 入力信号レベル設定 |
| オシロスコープ | 一般用（二現象）<br>感度：20mV/DIV以上<br>掃引時間：1μsec/DIV以上 | ヘッド・アジマス調整 |
| ひずみ率計 | 一般用<br>周波数：400Hz，1kHz<br>感度：10mV以上<br>測定範囲：0.1%以上 | 出力信号のひずみ率測定 |

| | | |
|---|---|---|
| バンド・パス・フィルタ | 一般用<br>帯域：1kHz（±10%）<br>30dB以上/OCT<br>帯域：聴感補正IHF規格 | 消去効果測定<br>クロストーク測定 |
| ミラー・テープ | TEAC MTT-902（4900015200） | テープ走行 |
| テスト・テープ | TEAC MTT-111<br>（4900010100） | テープ速度，ワウ・フラッタ用 |
| | TEAC MTT-150（4900011100）；Dolby B-Type | レベル用 |
| | TEAC MTT-256；DIN Ref. Level,<br>（4900050900）　時定数3180＋120μsec<br>31.5Hz～14kHz | ヘッド・アジマス，周波数特性用 |
| | TEAC MTT-5511（4900041700）<br>TEAC MTT-5561（4900041900）<br>TEAC MTT-5571（4900042000） | ブランク・テープ（NORMAL）<br>ブランク・テープ（$CrO_2$）<br>ブランク・テープ（METAL） |

## 4－2 メンテナンス諸条件

1. アンプ部の調整のまえに、消去ヘッド、録音ヘッド、テープ走行部分それぞれを充分消磁し、クリーナ液で清掃してテープ走行状態を確認する。
2. 特に指定の無い限り、調整及びチェックはL－ch，R－chの順序で行って下さい。
   尚R00／R00，R000／R000のように記されている回路番号はL－ch／R－chを示します。
3. 0dBV＝1.0V

# 5. MECHANICAL CHECKS AND ADJUSTMENTS
# 機構部のチェックと調整

## 5-1 MICRO SWITCH

1. Prepare a standard cassette shell with the record protection tabs in place.
2. Load this cassette and close the cassette holder.
3. Adjust mounting position of the two micro switches, cassette-in switch (S502) and record safety switch (S501) (for switch location, refer to Fig. 3-3, so that the actuator position is in the setting range shown by Fig. 5-1.
4. Be sure that the cassette-in switch is properly actuated to start the capstan motor.
5. Make sure that the record safety switch is properly actuated so that when depressing the RECORD button together with the PLAY button, the deck is set in record mode (or can not be set in record mode if the cassette loaded has no tabs).

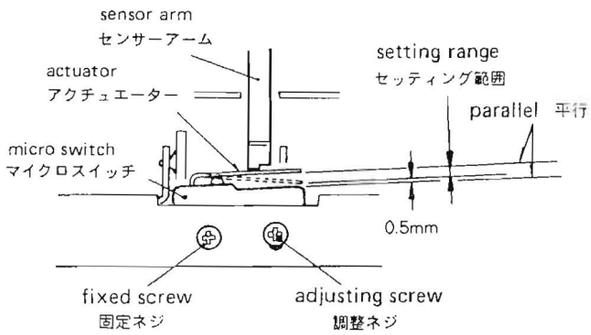


Fig. 5-1

## 5-2. HEAD HEIGHT, TILT AND AZIMUTH

1. Set head check jigs A and B.
2. Adjust height adjusting screw A shown in Fig. 5-4 so that tip of non-marked side of the jig B does not touch the guide of the rec/PB head, but the red marked side touches the guide.
3. Apply jig B to head and check for tilt. (Fig. 5-3)
   Adjust tilt adjusting screw B (Fig. 5-4) as required. After completion of the adjustment, make sure the head height adjustment is not upset, using the step 2 above.
4. Adjust P/B head azimuth by adjusting screw C referring to item 6-1.
   Adjust rec head azimuth by turning adjusting screw D slightly referring to item 6-3.
   After adjustment, repeat steps 2 and 3.

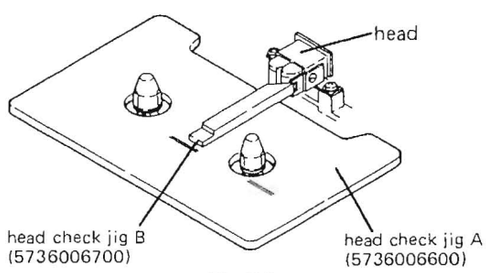


Fig. 5-2

## 5−1 マイクロ・スイッチ

1. 誤消去防止用ツメ付の標準カセットを用意する。
2. このカセットを装てんし、カセット・ホルダを閉じる。
3. カセットイン・スイッチ（S502）、録音防止スイッチ（S501）共（両スイッチ取付個所は図3−3を参照）、アクチュエータ位置が図5−1のセッティング範囲内になるようにスイッチ取付位置を調整する。
4. カセットイン・スイッチが正しく作動してキャプスタン・モータが回転するか確認する。
5. 録音防止スイッチが正しく作動して、RECORD釦とプレイ釦を一緒に押すと、確実に録音ができるか（または誤消去防止用ツメが付いていないカセットを装てんの場合には録音できないか）確認する。

## 5−2 ヘッドの高さ、チルト、アジマス

1. ヘッドの位置調整治具A，Bをセットする。
2. 治具Bの無印側では録再ヘッドのガイドに当らず赤マーク側でガイドに当るように図5−4のヘッド調整ネジ（A）で調整する。（図5−2）
3. 治具Bをヘッドに当てチルトを確認する。（図5−3）
   調整はネジ（B）で行なう。（図5−4）
   調整を行なった後、高さが狂わなかったステップ2で再チェックする。
4. 再生ヘッドのアジマスは6−1項に従って調整ネジ（C）で行なう。
   録音ヘッドは6−3項に従って調整ネジ（D）で行なう。
   調整ネジ（D）は僅かな回転（1回転）でよい。
   調整を行なった後は、ステップ2の高さ、ステップ3のチルトを再チェックしてください。

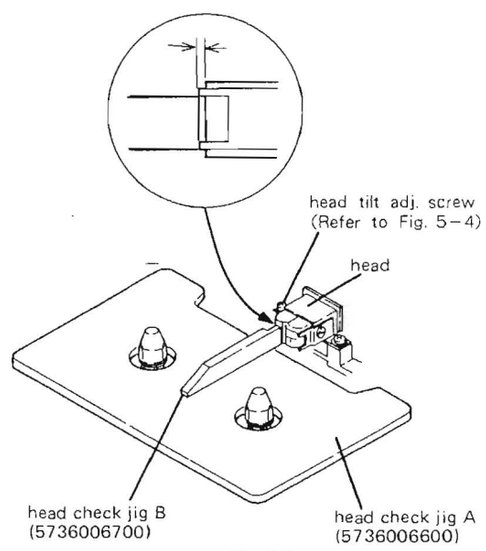


Fig. 5-3

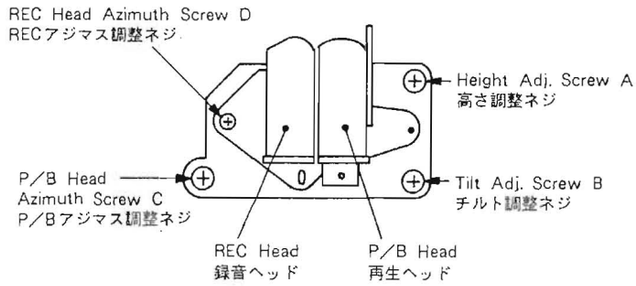


Fig. 5-4

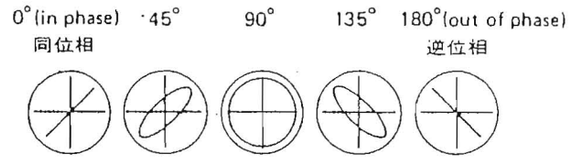


Fig. 5-5

## 5-3 HEAD BASE POSITION

### 5-3-1 STOP MODE

1. With the deck in STOP mode, adjust the trim pot R547 (Fig. 5-3) so that the head base comes to the lowest position.
2. Turn the reduction pulley (see Fig. 3-3) with your hand to check whether the head base exceeds the lowest position adjusted above or not.
3. If it does, adjust R547 again.
4. Repeat steps 1 through 3 until a good result is achieved.
5. Operate the deck in the sequence of PLAY, STOP, PLAY, and finally power-off modes. Repeat this sequence two or three times.
6. Then observe the stop position of the head base. If the head base still exceeds than the position in step 3, readjust R547 and repeat steps 1 through 5 until the head base comes to the lowest position.

### 5-3-2 F.F./REW MODES

1. Run the deck in the F.F. (fast forward) or REW (rewind) mode and adjust the trim pot R544 (Fig. 5-6) so that the following two conditions are obtained.
   a) A clearance between brake drum and brake pad ("A" in Fig. 5-7) of approx. 1.5 to 2 mm.
   b) Head base should not go too far up (so the heads do not touch the moving tape, and quick braking action is possible).
2. Repeat switching operations from the STOP mode to F.F. or REW mode two or three times and make sure the above adjustment is satisfied.

## 5－3 ヘッド・ベース位置

### 5－3－1 ストップ・モード時

1. ストップ・モード時に、ヘッド・ベースが最も下方にくるように半固定抵抗R547（図5－6）を調整する。
2. 減速プーリ（図3－3参照）を手で回転させ、ヘッド・ベースが上記の調整位置よりさらに下へくるかどうか確認する。
3. もし下へくるようならば、R547をさらに調整する。
4. 1～3項を繰り返して、結果が良くなるようにする。
5. プレイ・モードからストップ・モード、そしてプレイ・モードから電源を切る操作を2,3度繰り返す。
6. 5項を終了後、ヘッド・ベースの停止位置を見る。もし、3項で調整された位置より下にくるようならば、R547をさらに調整し次に1～5項を繰り返して、ヘッド・ベースが最も下にくるようにする。

### 5－3－2 F.F./RWDモード時

1. F.F（早送り）またはRWD（早巻戻し）モード中に下記の状態が得られるように半固定抵抗R544（図5－6）を調整する。
   - ブレーキ・ドラムとブレーキ・パッドのすき間（図5－7のA）が約1.5mm～2mmであること。
   - ヘッド・ベースはできるだけ上方へ行かないこと・・・・走行中のテープが各ヘッドに当らない状態を得る為、およびブレーキのタイミングをできるだけ早くする為。
2. ストップ・モードからF.F.,またはRWDモードへの切換え操作を2, 3度繰り返し上記の調整を満足しているか確認する。

### 5-3-3 PAUSE MODE

1. With the deck in the play mode, check that there is clearance of 0.5 mm or more between the pinch roller arm and the spring arm ("D" in Fig. 5-8).
2. Set the deck to PAUSE mode and observe the clearance between the pinch roller and capstan shaft ("B" in Fig. 5-7). It should be 0.5 mm or more.
3. If not, adjust the trim pot R545.
4. Repeat switching operations from STOP to PAUSE mode two or three times, and make sure that when repeating steps 1 and 2, the clearances "D" and "B" are within the specified range respectively. Also make sure there is a clearance between head base and spring stud ("C" in Fig. 5-8).

### 5-3-4 CUE MODE

1. Load a prerecorded tape.
   Make sure cue signal is developed when the FF or REW button is pushed with the PAUSE mode set. If the cue signal is not developed or the level is excessively low, adjust the trim pot R546 (Fig. 5-6).

### 5－3－3 ポーズ・モード時

1. プレイ・モードにして、ピンチ・ローラ・アームとスプリング・アームのすき間（図5－8のD）が約0.5mm以上であるか確認する。
2. ポーズ・モードの時にピンチ・ローラとキャプスタン・シャフトの間隔（図5－7のB）が約0.5mm以上であるか確認する。
3. もし外れている場合は、半固定抵抗R545で調整する。
4. ストップ・モードからポーズ・モードへの切換え操作を2, 3度繰り返した後、再度1, 2項のチェックをして、間隔DとBがそれぞれ規定通りか確認する。また、ヘッド・ベースとスプリング支柱との間（図5－8のC）にすき間があるか確認する。

### 5－3－4　キュー・モード

1. 録音済みのテープを挿入する。
   ポーズ・モードにしてFFボタンまたはREWボタンを押した時にキュー信号が出るかどうか確認する。キュー信号が出ないかまたは信号レベルが極端に低い場合は、半固定抵抗R546（図5－6）を調整する。

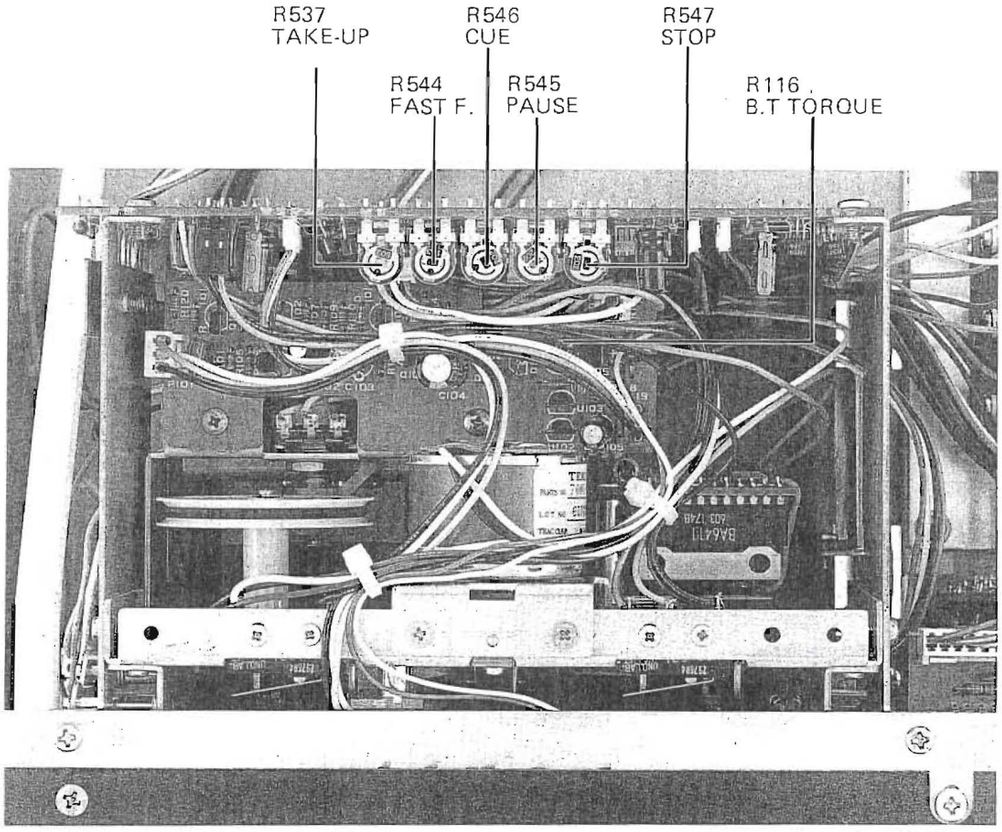


Fig. 5-6

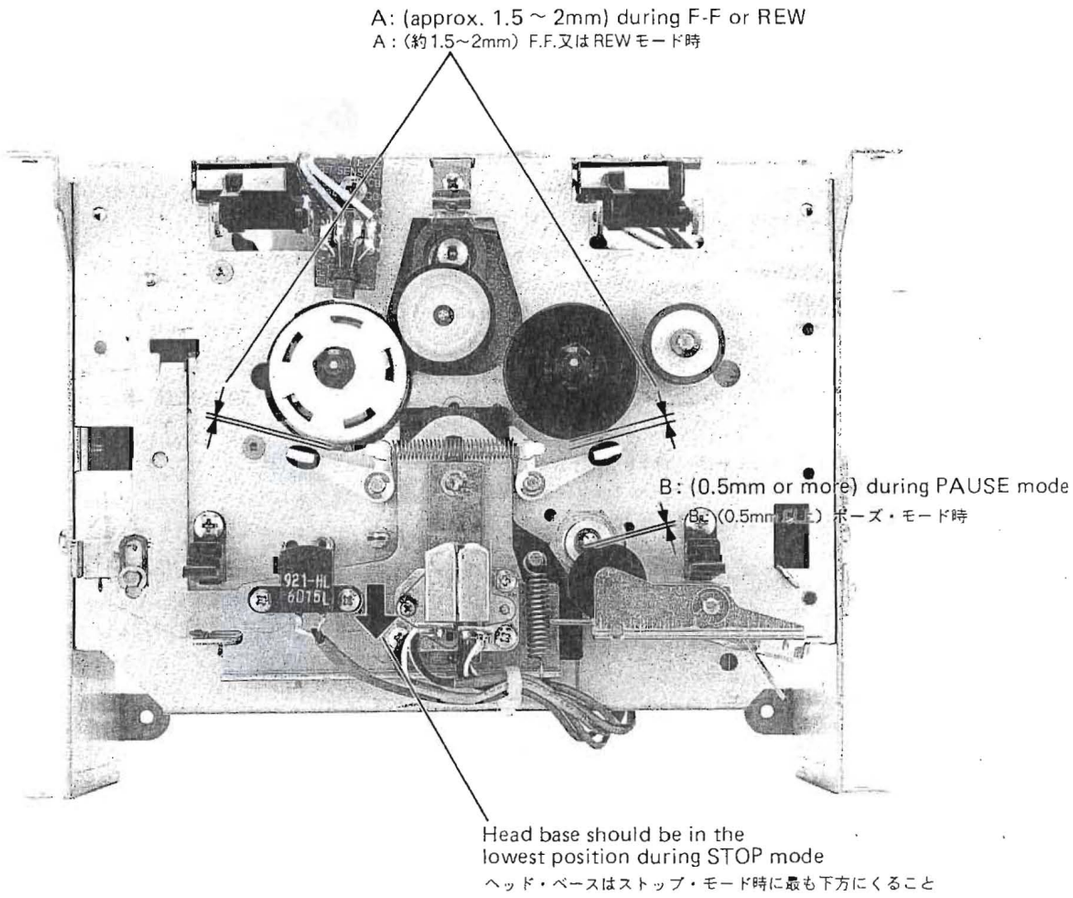


Fig. 5-7

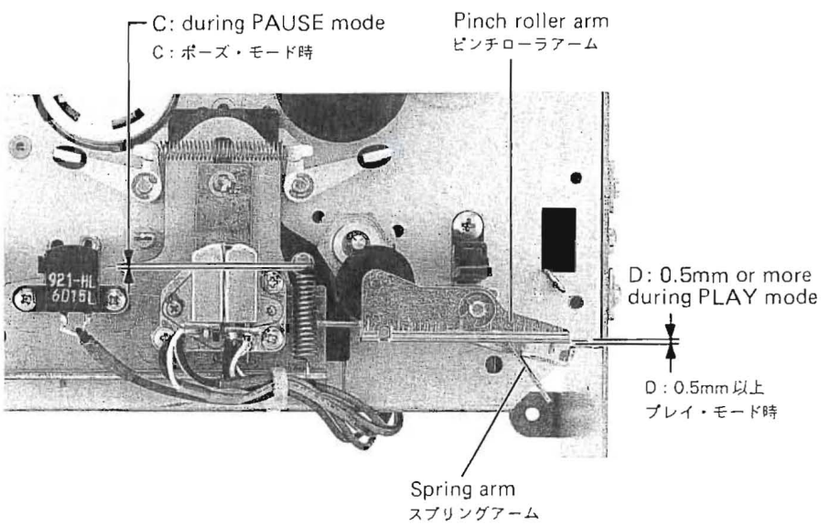


Fig. 5-8

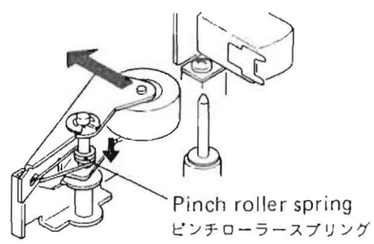


Fig. 5-9

## 5-4 PINCH ROLLER PRESSURE

1. Pushing up the cassette-in sensor arm (refer to Fig. 3-2), activate the play mode. Keep the sensor arm pushed up during measurement.

   **Note:** During play operation, make sure there is a clearance of 0.5 mm or more between the pinch roller arm and the spring arm. Refer to Fig. 5-8.
2. Hook a spring scale to the small opening on the pinch roller arm.
3. Pull the scale as shown by arrow until the pinch roller moves away from the capstan shaft by approx. 2 mm, and then allow the pinch roller to just touch the capstan shaft again.
4. Read the scale when the pinch roller just starts to rotate. The reading should be from 350 g to 500 g (12.3 Oz. to 17.6 Oz.).
5. If the pinch roller spring (Fig. 5-9) was replaced for repair, always position the spring around the lower half of the spring shaft as shown in Fig. 5-9.

## 5-5 REEL TORQUE

### 5-5-1 TAKE-UP/BACK TENSION TORQUES

1. Load a cassette torque meter in the cassette holder, and run the deck in play mode. The meter reading should be:

   Take-up torque (right reel table): 47 to 53 g-cm (0.65 to 0.74 oz-inch)

   Back tension torque (left reel table): 9 to 11 g-cm (0.13 to 0.15 oz-inch)
2. If the back tension torque is out of limits, adjust the trim pot R116 (Fig. 5-6).

   The adjustment should be made about 15 sec. after the reel starts rotation. Read the torque meter for about 5 sec. after completion of the adjustment.
3. If the take-up torque is out of the limits, adjust the trim pot R537 (refer to Fig. 5-6).
4. If the take-up torque is still out of the limits, adjust the torque adjusting ring provided on the right reel table. The torque can be adjusted to three values as shown in Fig. 5-10. Turn the torque adjusting ring with the tab Ⓐ, pulling slightly upward, and place the tab on one of three stepped portions having pawls to fix the tab.
5. Repeat steps 2 and 3 until good results are achieved.

   **Caution:** In each track measurement, a cassette type torque meter is used. The torque meter should be calibrated with a reference dial type torque meter.

## 5－4 ピンチ・ローラ圧着力

1. カセットイン・センサー・アーム（図3－2参照）を上方に押して、プレイ・モードにする。測定中、センサー・アームは上方に押し続けること。

   注意：プレイ・モード中、ピンチ・ローラ・アームとスプリング・アーム間に約0.5mm以上のすき間があるか確認する（図5－8参照）。
2. ピンチ・ローラ・アームの小さい穴にバネ秤を掛ける。
3. ピンチ・ローラがキャプスタン・シャフトから約2mm離れるように秤を矢印の方向に引張った後、ピンチ・ローラが再びキャプスタン・シャフトに接触するように除々に戻す。
4. ピンチ・ローラが回りはじめる時の値を読む。測定値は350～500gの範囲内に入ること。
5. もし修理のためにピンチ・ローラ・スプリング（図5－9）の交換をした時は、必ず図5－9のようにスプリングをスプリング・シャフトの下側に位置させる。

## 5－5 リール・トルク

### 5－5－1 テイクアップ・トルク／バック・テンション・トルク

1. カセット・ホルダーにカセット・トルク・メータを装てん後、プレイ・モードにする。規定値は次の通りです。

   テイクアップ・トルク（右リール台）：47～53・cm

   バック・テンション・トルク（左リール台）：9～11・cm
2. バックテンション・トルクが規定値から外れている場合は半固定抵抗R116（図5－6）を調整する。

   調整はスタート約15秒たってから調整する。また、そのままの状態（約5秒）で確認する。
3. もしテイクアップ・トルクが規定値から外れている場合は、半固定抵抗R537（図5－6参照）を調整する。
4. もしテイクアップ・トルクが更に規定値から外れている場合は、右リール台のトルク調整リングを回して調整する。トルクは図5－10に示すように3段階に調整できる。リール台のマーカのある部分だけ段階部分にツメが設けられているので、調整時にはタブAを持ち上げるようにしてトルク調整リングを回す。
5. 2, 3項を繰り返して最適トルクを求める。

注意：それぞれのトラックはカセットタイプのトルクメーターで測定する。測定する前に、標準ダイアル型トルクメーターで較正しておく。

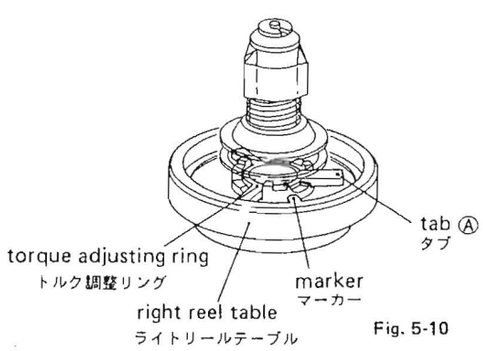


Fig. 5-10

### 5-5-2 F.F./REW TORQUES

1. Load a cassette torque meter in the cassette holder and measure starting torque for both F.F. (fast forward) and REW (rewind) operations with the tape wound close to end or rewound close to beginning, respectively.
   The reading should be:
   F.F. torque (right reel table): more than 55 g-cm (more than 0.76 oz-inch)
   REW torque (left reel table): more than 80 g-cm (more than 1.1 oz-inch)

### 5-5-2 F.F／RED トルク

1. カセット・ホルダにカセット・トルク・メータを装てんし、F.F.(早送り）動作の起動トルクをテープの巻終り近くで、またRWD動作の起動トルクをテープの巻始め近くでそれぞれ測定する。　規格は次の通りです。
   F.F.トルク（右リール台）: 55g・cm以上
   RWDトルク（左リール台）: 80g・cm以上

## 5-6 TAPE SPEED

1. Connect a frequency counter to either one of OUTPUT jacks. Fig. 5-11.
2. Depress POWER switch to ON.
3. Load a TEAC MTT-111 test tape containing a 3,000 Hz test tone, then leave the deck for at least one minute to warm up the capstan motor.
4. Playback the test tape, and make sure the following values are obtained at the beginning and at the end of the tape.
   (PITCH CONT SW: OFF)
   Deviation: 3,000 Hz±30 Hz
   PITCH CONTrol range: More than ±12% for the speed when
   (PITCH CONT SW: ON) PITCH CONT is set to off.
5. If the speed is out of the limits, adjust as follows:
   a) Clean the tape path and check the pinch roller pressure and take-up torque.
   b) If they are normal, push PITCH CONTrol (off), and reproduce approx. the mid portion of the test tape.
   c) Adjust the speed trim pot R502 (refer to Fig. 3-1) provided on the rear side of the PITCH CONTrol switch using a small "–" driver with the handle completely insulated from the blade to obtain a 3,000 Hz ±5 Hz reading on the frequency counter.

## 5-6 テープ速度

1. 周波数カウンタをOUTPUTジャックに接続する（図5-11参照）
2. POWERスイッチを押してオンにする。
3. キャプスタン・モータを回転させウォーミングアップするためにTEAC MTT-111テスト・テープを装てんして、少くとも一分間そのままにしておく。
4. テスト・テープを再生させ、テープの巻始めと巻終りにて下記の値が得られるか確認する。
   偏差: 3,000Hz±30Hz PITCH CONTスイッチ OFF
   ピッチ・コントロール可変範囲（PITCH CONTスイッチ ON）:
   PITCH CONT オフ時の速度に対して
   ±12%以上
5. もし速度が範囲から外れている場合は、次の通り調整する。
   a. テープ走行面を清掃して、ピンチ・ローラ圧着力、テイクアップ・トルクをチェックする。
   b. その結果が正常であれば、ピッチ・コントロールをオフにさせ、テスト・テープのテープ巻きの中ほどを再生する。
   c. 周波数カウンタが3,000Hz±5Hzを示すようにピッチ・コントロール・スイッチの裏側にあるスピード半固定抵抗R502（図3-1参照）を回して調整する。調整には柄が刃先から完全に絶縁されている小型マイナス・ドライバを用いること。

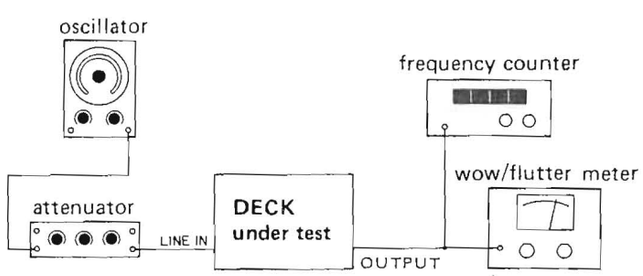


Fig. 5-11

## 5-7 WOW AND FLUTTER

**Note:** These measurements should be made at the beginning, middle and the end of the tape.

1. Connect a wow and flutter meter to the deck as shown in Fig. 5-11.
2. Load and play a TEAC MTT-111 test tape or equivalent.
3. Measure the wow and flutter value.
   Specifications: ±0.08% peak (DIN/IEC/ANSI weighted)
   0.06% (NAB weighted)

## 5-8 CASSETTE HOLDER

1. Adjust the holder guide plate's mounting position so that when the cassette holder in which the cassette tape is inserted is closed, the parallel condition shown in Fig. 5-12 is obtained.

## 5−7 ワウ・フラッタ

注意：テープの巻始め、中間、巻終りでそれぞれ測定します。

1. 図5−11のようにワウ・フラッタ・メータをデッキに接続する。
2. TEAC MTT−111テスト・テープまたは相当品を装てんして再生する。
3. ワウ・フラッタ値を測定する。
   規格： 0.06%WRMS（聴感補正）

## 5−8 カセット・ホルダ

1. カセットがそう入されたカセット・ホルダを閉じて、図5−12に示す平行状態が得られるようにホルダ・ガイド板の取付位置を調整する。

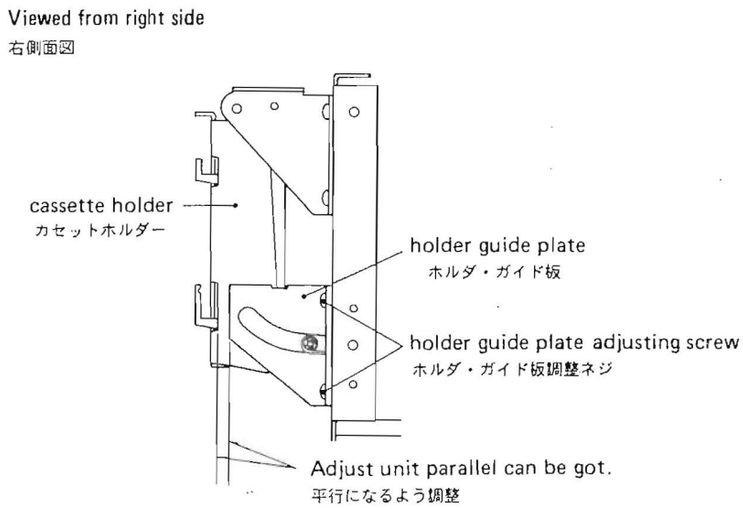


Fig. 5-12

## 5-9 DAMPER ADJUSTMENT

1. Load a C-60 tape and close the cassette holder (with the door cover attached).
2. Turn the air adjusting screw so that when pushing the EJECT button, the cassette holder opens smoothly and completely, taking 0.5 to 1.5 seconds.

## 5－9 ダンパ調整

1. ブランク・テープ（MTT－5511）を装てんして、カセット・ホルダ（ドア付）を閉じる。
2. EJECT釦を押した時、カセット・ホルダが0.5秒～1.5秒の時間でなめらかにかつ完全に開くように、エア調整ネジを回して調整する。

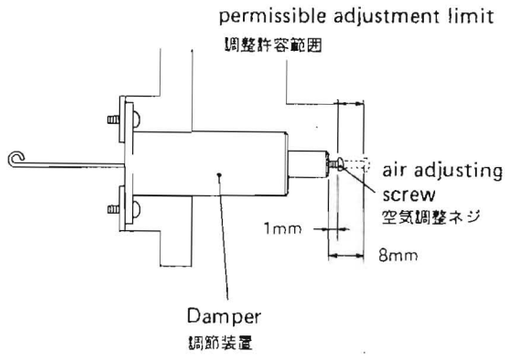


Fig. 5-13

## 5-10 VOLTAGE CONVERSION (FOR GENERAL EXPORT MODELS)

ALWAYS DISCONNECT THE POWER LINE CORD BEFORE MAKING THESE CHANGES.

1. Locate the voltage selector on the rear panel.
2. Using a regular (slot blade) screwdriver, turn the selector until the numerals corresponding the voltage requirements of your area appear.
3. We suggest you label the rear panel with the set AC line voltage.

**Note:** Select 50 Hz or 60 Hz by S501 on Control PCB Ass'y.

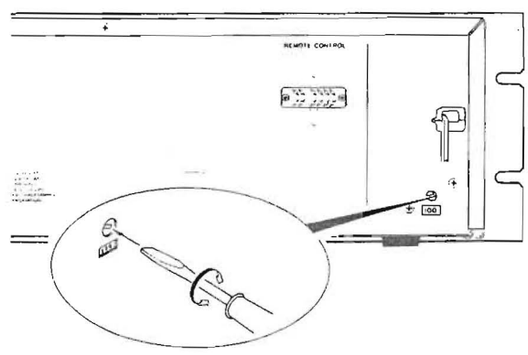


Fig. 5-14

［注］ 50Hz／60Hzの切換はコントロールPCB Ass'y上のスイッチS501で行ないます。

# 6. ELECTRICAL CHECKS AND ADJUSTMENTS

## アンプ部のチェックと調整

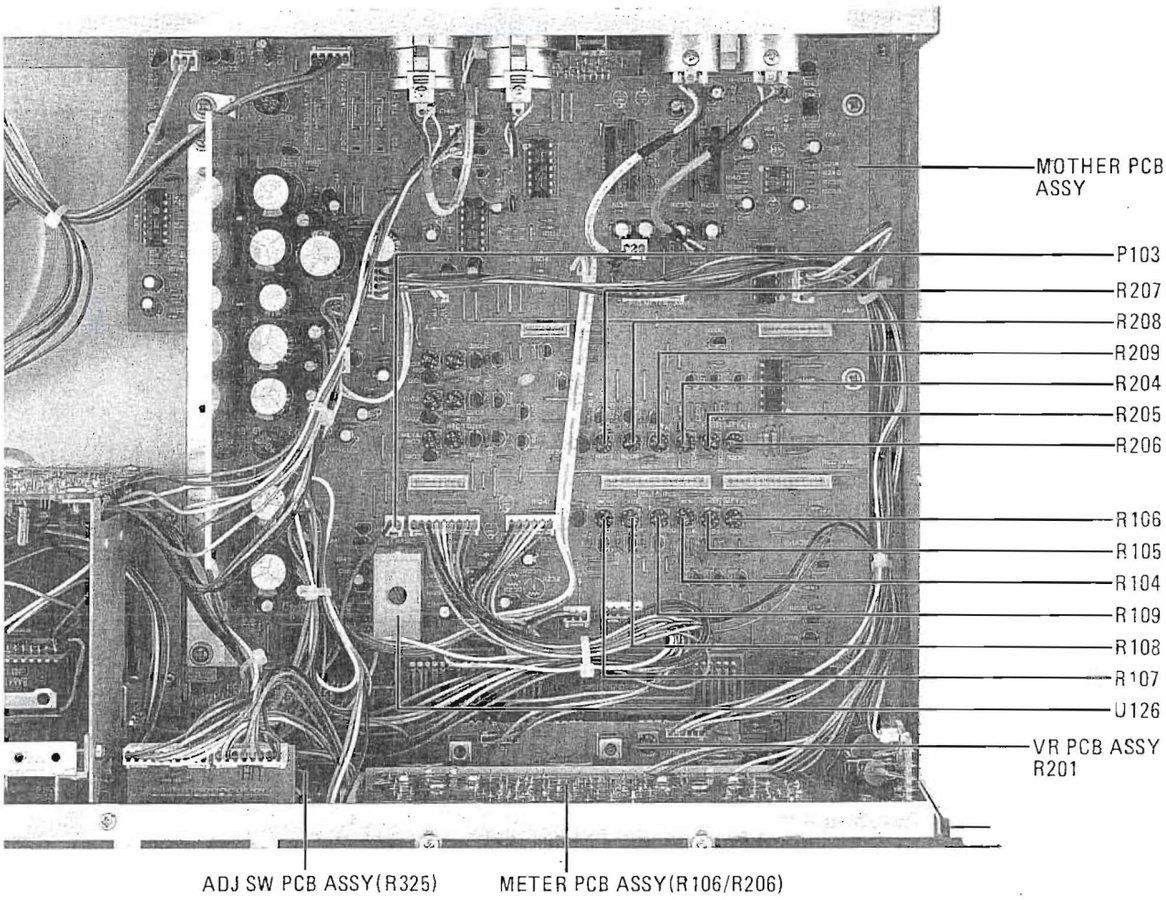


**MOTHER PCB ASSY**

| REFERENCE NUMBER | FUNCTION | REFERENCE NUMBER | FUNCTION |
|---|---|---|---|
| R101/R201 | BIAS ADJUSTMENT (NORMAL) | R107/R207 | REC LEVEL ADJUSTMENT (NORMAL) |
| R102/R202 | BIAS ADJUSTMENT ($CrO_2$) | R108/R208 | REC LEVEL ADJUSTMENT ($CrO_2$) |
| R103/R203 | BIAS ADJUSTMENT (METAL) | R109/R209 | REC LEVEL ADJUSTMENT (METAL) |
| R104/R204 | REC EQ ADJUSTMENT (NORMAL) | | |
| R105/R205 | REC EQ ADJUSTMENT ($CrO_2$) | U126 | BIAS OSC FREQUENCY ADJUSTMENT |
| R106/R206 | REC EQ ADJUSTMENT (METAL) | | |

**METER PCB ASSY**

| REFERENCE NUMBER | FUNCTION |
|---|---|
| R106/R206 | METER CALIBRATION |

**VR PCB ASSY**

| REFERENCE NUMBER | FUNCTION |
|---|---|
| R201 | OUTPUT LEVEL BALANCE ADJUSTMENT (R-ch) |

**ADJ SW PCB ASSY**

| REFERENCE NUMBER | FUNCTION |
|---|---|
| R325 | 400 Hz/10 KHz LEVEL BALANCE ADJUSTMENT |

Fig. 6-1 Adjustment Points

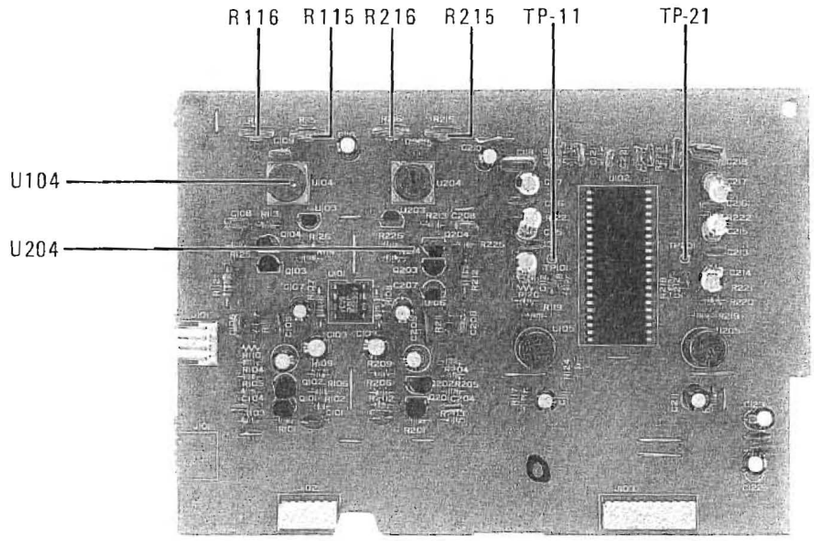


| REFERENCE NUMBER | FUNCTION | REFERENCE NUMBER | FUNCTION |
|---|---|---|---|
| R115/R215 | DOLBY LEVEL CALIBRATION | U104/U204 | BIAS TRAP (REPRO) |
| R116/R216 | REPRO EQ ADJUSTMENT | | |

Fig. 6-2 Check and Adjustment Points on PLAY AMP P.C.B. ASSY.

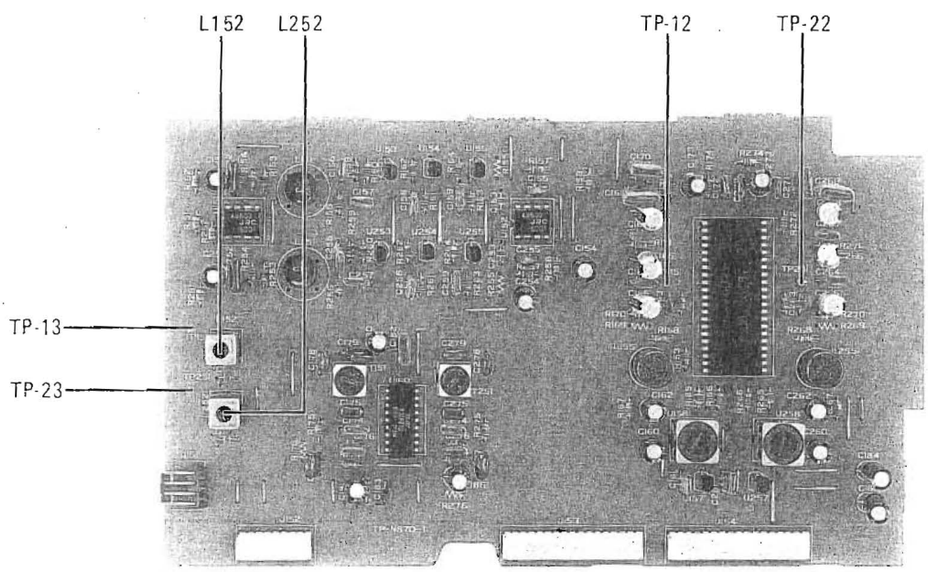


| REFERENCE NUMBER | FUNCTION |
|---|---|
| L152/L252 | BIAS TRAP (REC) |

Fig. 6-3 Check and Adjustment Points on REC AMP P.C.B. ASSY.

## 6-1. PLAYBACK PERFORMANCE 再生系

**Initial Settings** 予備設定

| | | | |
|---|---|---|---|
| DOLBY NR switch | : OUT | OUTPUT switch | : REPRO |
| MPX FIL switch | : OUT | OSC switch | : OFF |
| TAPE switch | : NORMAL | ADJ switch | : OFF |

Mode : PLAY

| ITEM 調整項目 | SETTING 設 定 — | INPUT SIGNAL 入力信号 | ADJUST (or CHECK) 調整個所 | HEASURING POINT, RESULT 測定個所・調整値 |
|---|---|---|---|---|
| 1. REC・PLAY head azimuth 録・再ヘッドアジマス | Connection (接続) : Fig. 6-4 | MTT-256 10 KHz section | P.B azimuth adj. srews (Fig. 6-4-2) | OUTPUT : Phase between L-ch/R-ch : 0° Hax. output at L-ch & R-CH's L-R間の位相差が0° で且つ両ch 共最大出力 |
| 2. Repro output level 再生出力レベル | Connection (接続) : Fig. 6-5 | MTT-150 | R115/R215 (Fig. 6-2) | TP. 11/TP. 21 (Fig. 6-2) : 245 mV |
| | Connection (接続) : Fig. 6-6 | | OUTPUT CONT. | OUTPUT (RCA pin jack) L-ch : −7 dBV (0.447 mV) |
| | | | R201 (Fig. 6-1) | OUTPUT (RCA pin jack) R-ch : −7 dBV (0.447 mV) |
| | | | After adjusting, do not move the output cont. (Nominal position) 調整後はOUTPUTつまみを動かさないこと。(規定位置) | |
| 3. Repro frequency responce 再生周波数特性 | Connection (接続) : Fig. 6-6 | MTT-256 | R116/R216 (Fig. 6-2) | OUTPUT (RCA pin jack) : Level difference as slight as possible between for 315 Hz and 10 kHz. 315 Hzと10 kHzの出力が同レベルになるよう調整 |
| | | | Check | OUTPUT (RCA pin jack) : Specifications 規格 : Fig. 6-7 |

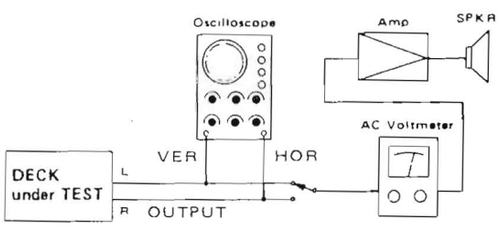


Fig. 6-4-1 Test setup for azimuth check 位相測定接続図

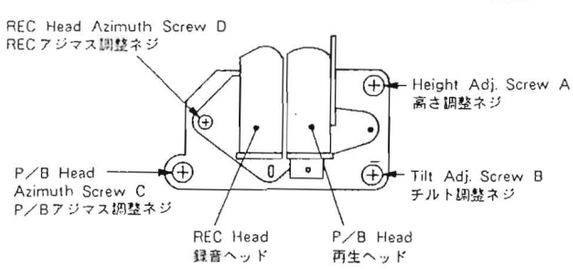


Fig. 6-4-2

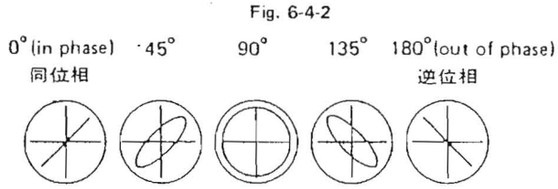


Fig. 6-4-3 Phase Difference
位相関係図

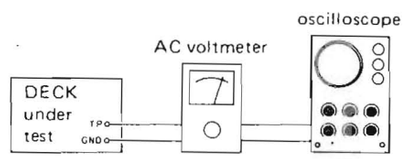


Fig. 6-5 Connections Through Test Points
テスト・ポイント・チェック時の接続図

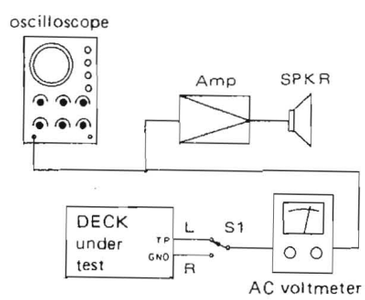


Fig. 6-6 Test setup for output check 出力測定時の接続図

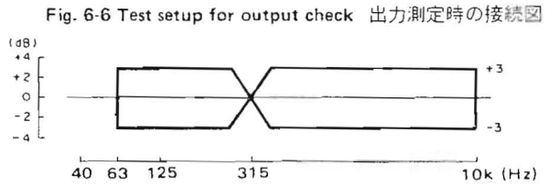


Fig. 6-7 Repro Frequency Response
再生周波数特性

## 6-2. MONITOR PERFORMANCE　モニター系

**Initial Settings** 予備設定

| | | | |
|---|---|---|---|
| DOLBY NR switch | : OUT | INPUT switch | : REAR |
| MPX FIL switch | : OUT | OUTPUT switch | : INPUT |
| TAPE switch | : NORMAL | OSC switch | : OFF |
| | | ADJ switch | : OFF |

**Mode : REC/PAUSE**　　INPUT SELECT switch(REAR): RCA IN

| ITEM<br>調整項目 | SETTING<br>設　定 | INPUT SIGNAL<br>入力信号 | ADJUST<br>(or CHECK)<br>調整個所 | HEASURING POINT,<br>RESULT<br>測定個所・調整値 |
|---|---|---|---|---|
| 4. Minimum INPUT level<br>最小入力レベル | Connection (接続) : Fig. 6-8<br>INPUT cont. : Max. | INPUT (Rear, RCA)<br>400 Hz／−18 dBV<br>(126 mV) | Check | OUTPUT (RCA pin jack) :<br>−10 dBV±3 dB (224 m ~ 447 mV) |
| 5. Nominal INPUT level<br>規定入力レベル | Same as above<br>同上 | INPUT (Rear, RCA)<br>400 Hz／−10 dBV<br>(316 mV) | INPUT cont.<br>L, R | OUTPUT (RCA pin jack) :<br>−10 dBV±3 dB (224 m ~ 447 mV) |
| | | | After adjusting, do not move the INPUT controls.<br>(Nominal position)<br>調整後はINPUTつまみを動かさないこと。(規定位置) | |
| 6. Meter level<br>メータ・レベル | Same as above<br>同上 | Same as above<br>同上 | R106／R206<br>(Fig. 6-1) | VU meter indication : 0 VU |
| 7. Internal osc.<br>内部発振器 | Same as above　同上<br>OSC switch → ON | No signal<br>無信号 | Check | VU meter indication : 0 VU±2 VU |
| | Same as above　同上<br>400 Hz／10 kHz switch :<br>400 Hz ←→ 10 kHz | No signal<br>無信号 | R325<br>(Fig. 6-1) | VU meter indication :<br>Adjust for minimum level difference between 400Hz and 10kHz switch positions.<br>スイッチを切替えたときメータ指示変化が最小になるよう調整する。 |
| 8. PHONES output level<br>PHONES出力レベル | Connection (接続) : Fig. 6-9 | INPUT (Rear, RCA) :<br>400 Hz／−10 dBV<br>(316 mV) | Check | PHONES each channel 各チャネルで :<br>More than −1 dBV (0.891 V)<br>−1 dBV (0.891 V) 以上 |
| 9. Bias osc frequency | Connection (接続) : Fig. 6-10<br>Record mode | No signal<br>無信号 | U126<br>(Fig. 6-1) | CONNECTOR P103 (pin2)<br>100 kHz (Fig. 6-1) |
| 10. Bias trap<br>バイアス・トラップ | Connection (接続) : Fig. 6-5<br>REC／PAUSE mode | Same as above<br>同上 | L152／1252<br>(Fig. 6-3) | TP. 13／TP. 23 (Fig. 6-3) :<br>Minimum bias leakage<br>バイアス漏れ最小 |
| 11. Front input | Connection (接続) : Fig. 6-8<br>REC／PAUSE mode | INPUT (Front, RCA) :<br>400 Hz／−10 dBV<br>(316 mV) | Check | OUTPUT (RCA pin jack) :<br>−10 dBV±1 dB (0.355 V ~ 0.282 V) |

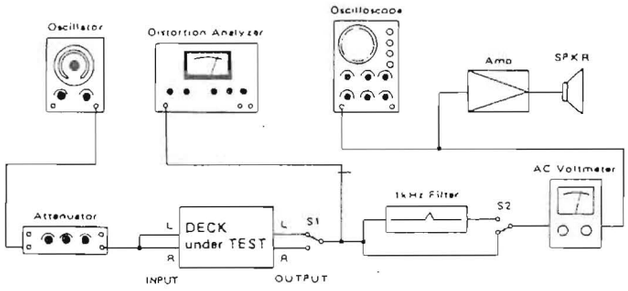


Fig. 6-8 Basic Test Setup
基本測定接続図

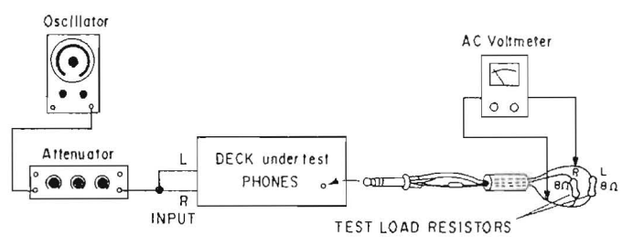


Fig. 6-9 Test setup for PHONES check
ホーン出力測定接続図

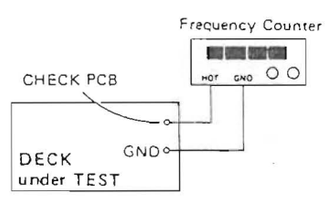


Fig. 6-10 Setup for Bias Osc. Frequency Adjustment
バイアス発振周波数調整用接続図

## 6-3. RECORDING PERFORMANCE 録音系

**Initial Settings** 予備設定

| | | | |
|---|---|---|---|
| DOLBY NR switch | : OUT | OUTPUT switch | : REPRO |
| MPX FIL switch | : OUT | OSC switch | : OFF |
| TAPE switch | : NORMAL | ADJ switch | : OFF |
| INPUT switch | : REAR | INPUT SELECT switch(REAR): RCA IN | |

**Mode : RECORD**

| ITEM<br>調整項目 | SETTING<br>設 定 | INPUT SIGNAL<br>入力信号 | ADJUST<br>(or CHECK)<br>調整個所 | HEASURING POINT, RESULT<br>測定個所・調整値 |
|---|---|---|---|---|
| 12. Bias-1<br>バイアス-1 | Connection (接続) : Fig. 6-8 | INPUT (REAR, RCA)<br>400 Hz, 10 kHz/<br>−40 dBV (10.0 mV) | R101/R201<br>(Fig. 6-1) | OUTPUT (RCA pin jack) :<br>Equal output level (record then Reproduce) between for 400 Hz and 10 kHz.<br>400 Hz と 10 kHz の録再出力が等しくなること。 |
| 13. Rec azimuth-1<br>録音アジマス-1 | Connection (接続) : Fig. 6-4 | INPUT (REAR, RCA)<br>10 kHz/−40 dBV<br>(10.0 mV) | REC azimuth adj. screw<br>(Fig. 6-4-2) | OUTPUT (RCA pin jack) L & R :<br>Phase between L-ch & R-ch : 90° or less<br>L-R間の位相差 : 90° 以内 |
| 14. Rec bias<br>録音バイアス | Connection (接続) : Fig. 6-8 | INPUT (REAR, RCA)<br>6.3 kHz/−40 dBV<br>(10.0 mV)<br><br>Adjusting point :<br>Fig. 6-1 | Turn bias adjust pot (s) CCW and adjust the pot CW carefully. Set the pot at position which develops a value shown below after rec/repro output passes a peak level.<br>調整するボリュームを一旦左に回しておいてから徐々に右に回す。録再出力がピークを過ぎて下記のレベルだけ下がる点にセットする。 | |
| | Test tape :<br>MTT-5511 NORMAL | | R101/R201 | OUTPUT (RCA pin jack) : 4 dB |
| | Test tape :<br>MTT-5561 CrO2 | | R102/R202 | OUTPUT (RCA pin jack) : 3 dB |
| | Test tape :<br>MTT-5571 METAL | | R103/R203 | OUTPUT (RCA pin jack) : 1 dB |
| 15. Rec level-1<br>録音レベル-1 | Connection (接続) : Fig. 6-8<br>Test tape :<br>MTT-5511 NORMAL | INPUT (REAR, RCA)<br>400 Hz/−10 dBV<br>(316 mV)<br><br>Adjusting point :<br>Fig. 6-1 | R107/R207 | OUTPUT (RCA pin jack) :<br>−10 dBV (316 mV) |
| | Same as above 同上<br>Test tape : MTT-5561 CrO2 | | R108/R208 | |
| | Same as above 同上<br>Test tape :<br>MTT-5571 METAL | | R109/R209 | |
| 16. Rec EQ<br>録音イコライザ | Connection (接続) : Fig. 6-8<br>Test tape :<br>MTT-5511 NORMAL | INPUT (REAR, RCA)<br>400 Hz, 10 kHz/<br>−10 dBV (316 mV)<br><br>Adjusting point :<br>Fig. 6-1 | R104/R204 | OUTPUT (RCA pin jack) :<br>Adjust to obtain same output level at 10kHz and 400Hz.<br>10 kHz 出力が 400 Hz 出力と同じになるよう調整する。 |
| | Same as above 同上<br>Test tape : MTT-5561 CrO2 | | R105/R205 | |
| | Same as above 同上<br>Test tape :<br>MTT-5571 METAL | | R106/R206 | |
| 17. Rec azimuth-2<br>録音アジマス-2 | Connection (接続) : Fig. 6-4 | INPUT (REAR, RCA)<br>400 Hz, 10 kHz/<br>(10.0 mV) | Check | OUTPUT (RCA pin jack) :<br>Phase difference between simultaneous and different time REC/PLAY.<br>同時録再, 異時録再の位相差<br>400 Hz : 45° 以内<br>10 kHz : 90° 以内 |
| 18. Rec level-2<br>録音レベル-2 | Connection (接続) : Fig. 6-8<br>Test tapes : same item 15. | INPUT (REAR, RCA)<br>400 Hz/−10 dBV<br>(316 mV) | Check | OUTPUT (RCA pin jack) :<br>All tapes. DOLBY NR IN/OUT<br>−12 dBV to −8 dBV<br>(251 mV to 398 mV) |
| 19. Total harmonic distortion<br>総合歪率 | Connection (接続) : Fig. 6-8<br>Test tapes : same as above<br>DOLBY NR : OUT | INPUT (REAR, RCA)<br>400 Hz/−10 dBV<br>(316 mV) | Check | OUTPUT (RCA pin jack) :<br>2.0% or less for all tapes.<br>各テープで2.0%以下 |

| ITEM<br>調整項目 | SETTING<br>設 定 | INPUT SIGNAL<br>入力信号 | ADJUST<br>(or CHECK)<br>調整個所 | MEASURING POINT,<br>RESULT<br>測定個所・調整値 |
|---|---|---|---|---|
| 20. Overall frequency<br>録再周波数特性 | Connection (接続) : Fig. 6-8<br>DOLBY NR : OUT and IN | INPUT (REAR, RCA)<br>400 Hz~16 kHz/<br>−40 dBV (10.0 mV) | Check | OUTPUT (RCA pin jack) :<br>Specification : Fig. 6-12 |
| 21. Bias leakage<br>バイアス漏れ | Connection (接続) : Fig. 6-8 | No signal<br>無信号 | U104/U204<br>(Fig. 6-2) | OUTPUT (RCA pin jack) :<br>Minimum bias leakage<br>バイアス漏れ最小<br>Spec. : −40 dBV (10.0 mV) or less |
| 22. Manual CAL<br>マニュアル CAL | No connection 接続なし<br>OSC switch : ON (400 Hz)<br>ADJ switch : ON | No signal<br>無信号 | BIAS cont. | VU meter indication : max. |
| | | | LEVEL cont. | VU meter indication : 0 VU |
| | 400 Hz/10 kHz sw : 10kHz | | BIAS cont. | VU meter indication : 0 VU |
| | Connection (接続) : Fig. 6-8<br>OSC switch : OFF<br>DOLBY NR : OUT<br>Test tapes :<br>same as item 16 | INPUT (REAR, RCA)<br>400 Hz~16 kHz/<br>−40 dBV (10.0 mV) | Check | OUTPUT (RCA pin jack) :<br>Specification : Fig. 6-12 |
| 23. Overall S/N ratio<br>総合S/N | Connection (接続) : Fig. 6-8<br>DOLBY NR : OUT<br>Test tapes :<br>same as item 16 | No signal<br>無信号 | Check | OUTPUT (RCA pin jack) :<br>NORMAL : 41 dB min<br>CrO2 : 42 dB min<br>METAL : 42 dB min<br>Reference level 基準レベル :<br>400 Hz/−10 dBV (316 mV) |
| 24. Erase efficiency<br>消去効果 | Same as above<br>1 kHz filter connect<br>1 kHz フィルター接続<br>Test tape : MTT-5571 | INPUT (REAR, RCA)<br>1 kHz/0 dBV<br>(1.0 V) | Check | OUTPUT (RCA pin jack) :<br>65 dB min. |
| | Record a 1 kHz signal rewind tape to mid point of recorded potion. Erase the recorded portion with no input signal fined the difference between the 1 kHz portion and the " no-signal " portion.<br>1 kHz信号を録音後、中間までテープを巻き戻して一部を消去する。未消去部分と消去部分の1 kHz出力レベル差を測定 | | | |
| 25. Channel separation | Same as above | INPUT (REAR, RCA) :<br>L-ch : 1 kHz/<br>−10 dBV (316 mV)<br>R-ch : no signal | Check | OUTPUT (RCA pin jack) :<br>30 dB min. |
| | Find the difference between the 1 kHz recorded portion (L-ch) and the " no signal " portion (R-ch).<br>1 kHz録音部分 (L-ch) と無信号録音部分 (R-ch) の再生出力レベルの差を測定する。 | | | |
| 26. Adjacent track crosstalk<br>トラック間<br>クロストーク | Same as above but a 1 kHz filter is not connected<br>同上 1 kHz フィルターは<br>使用せず | INPUT (REAR, RCA) :<br>L-ch : no signal<br>R-ch : 125 Hz/<br>−10 dBV (316 mV) | Check | OUTPUT (RCA pin jack) :<br>40 dB min. |
| | Record a 125 Hz signal on R-ch and note output level. Then invert tape and play R-ch track.<br>Check leakage level against the output reference of previously recorded portion.<br>R-chに125 Hzを録音し、その再生出力を基準レベルとする。<br>次にテープを反転し、再生したときのR-ch出力レベルとの差を測定する。 | | | |

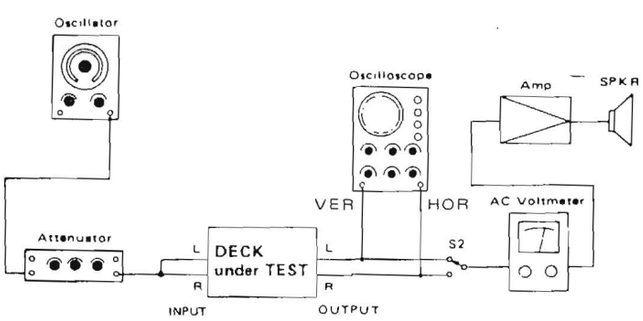


Fig. 6-11 Test setup for azimuth check
位相測定接続図

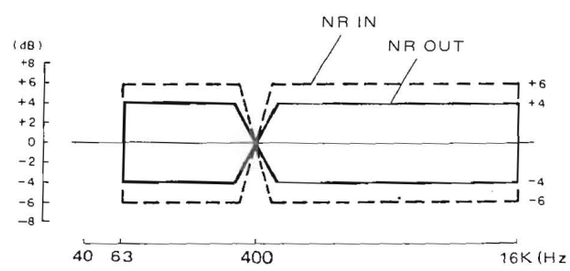


Fig. 6-12 Overall Frequency Response
総合周波数特性

# 7. EXPLODED VIEWS AND PARTS LISTS

## 分解図とパーツ・リスト

**NOTES**

As regards the resistors and capacitors, refer to the circuit diagrams and the PCB ass'y drawings included in this brochure.

* Parts marked with * require longer delivery time.
* Resistor values are in ohms (K = 1,000 ohms, M = 1,000,000 ohms).
* All capacitor values are in microfarads (p = picofarads).
* ⚠ Parts marked with this sign are safety critical components. They must always be replaced with identical components – refer to the TEAC Parts List and ensure exact replacement.
* 0 dB is referenced to 1V in this manual unless otherwise specified.
* PC boards shown viewed from foil side.
* Parts not shown in the parts lists or parts, though listed, having no parts numbers are not general "ready-to-supply" parts.

● Dolby Noise Reduction System manufactured under license from Dolby Laboratories Licensing Corporation.
"Dolby" and the double-D symbol are trademarks of Dolby Laboratories Licensing Corporation.

注意

標準器の抵抗：コンデンサーは省略してあります。回路図及び基板図を参照してください。

1. プリント基板図はパターン面が示されています。
2. ＊印の部品は納期が若干かかります。あらかじめご了承ください。
3. ⚠印は安全規格重要部品です。交換するときは必ずティアック指定の部品を使用して下さい。
4. レベルは0dB＝1Vを基準にしています。
5. コンデンサの単位はuF. p＝pF（1uF＝1,000,000pF）
6. 製品が改善されているために、製品と回路図が一部異っている場合があります。
7. リストされていない部品は原則としてサービス供給部品として取扱っていません。

※ノイズリダクションシステムは、ドルビー研究所からの実施権に基づき製造されています。
※ドルビー及び DD は、ドルビー研究所の登録商標です。

## EXPLODE VIEW-1

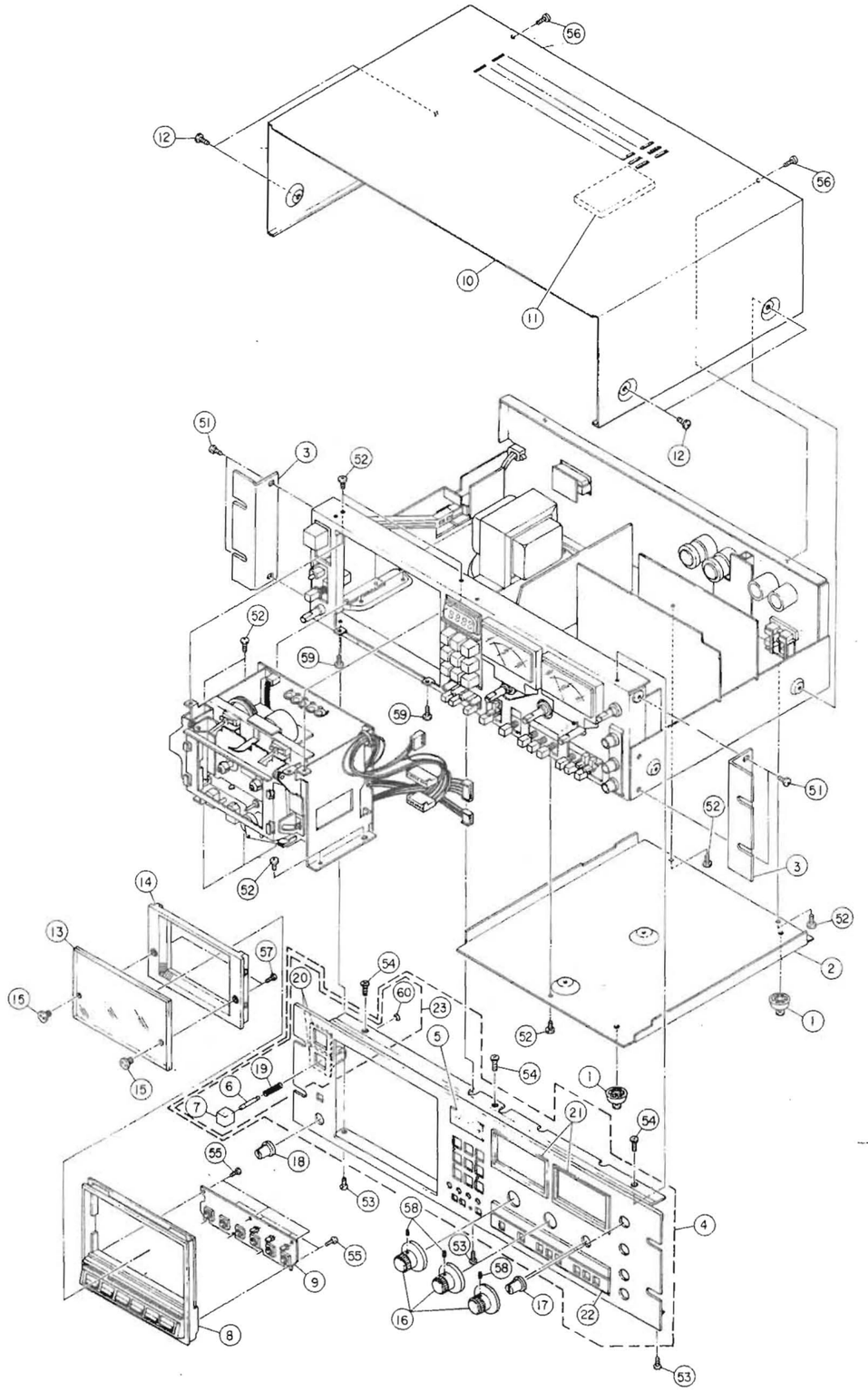

EXPLODED VIEW-1

Parts marked with * require longer delivery time.

| REF.NO. | PART NO. | DESCRIPTION | REMARKS |
|---|---|---|---|
| 1- 1 | *5730003300 | FOOT,FF-008(P4X6) | |
| 1- 2 | *5800826100 | COVER, BOTTOM | |
| 1- 3 | *5800826200 | ANGLE, RACK | |
| 1- 4 | *5800933900 | FRONT PANEL B ASSY | |
| 1- 5 | *5800690400 | WINDOW,COUNTER | |
| 1- 6 | *5800472201 | ROD,EJECT | |
| 1- 7 | 5800827800 | BUTTON,~~POWER~~ EJECT | |
| 1- 8 | *5800827201 | ESCUSHION ASSY | |
| 1- 9 | *5200121010 | OPERATION SW PCB ASSY | |
| 1-10 | *5800826600 | BONNET | |
| 1-11 | *5800933801 | PAD, PCB | |
| 1-12 | *5800612400 | SCREW,M3X8 BLK | |
| 1-13 | 5800471701 | COVER,CASSETTE | |
| 1-14 | 5800122500 | COVER,CASSETTE;2 | |
| 1-15 | *5800116800 | BUSHING | |
| 1-16 | 5543027100 | KNOB,VR | |
| 1-17 | 5800756100 | KNOB A ASSY(14) | |
| 1-18 | 5800757300 | KNOB C ASSY(14)5800756300 | |
| 1-19 | *5800471500 | SPRING, EFECT: A | |
| 1-20 | *5800894900 | ESCUSHION, BUTTON | |
| 1-21 | *5800825400 | ESCUSHION, METER | |
| 1-22 | *5800934000 | ESCUSHION, B | |
| 1-23 | *5800828200 | BUTTON, ESCUSHION ASSY | |
| 1-51 | *5783003008 | SCREW, S TITE PAN 3X8 | |
| 1-52 | *5783003005 | SCREW, S TITE PAN 3X5 | |
| 1-53 | *5783033006 | SCREW, S TITE BIND 3X6 | |
| 1-54 | *5783043006 | SCREW, S TITE FLAT 3X6 | |
| 1-55 | *5781112006 | SCREW, TAPPING M2X6 | |
| 1-56 | *5783613008 | SCREW, C TITE 3X8 (BLK NI) | |
| 1-57 | *5781112606 | SCREW, TAPPING 2.6X6 | |
| 1-58 | *5782003004 | SCREW, HEX M3X4 | |
| 1-59 | *5783622608 | SCREW, FLANGED M2.6X8 | |
| 1-60 | *5786002500 | E RING, E-25 | |

INCLUDED ACCESORIES

| REF.NO. | PART NO. | DESCRIPTION | REMARKS |
|---|---|---|---|
| | 5700091700 | OWNER'S MANUAL[J] | |
| | 5700091800 | OWNER'S MANUAL[US, C, A, GE, UK] | |
| | 5700091900 | OWNER'S MANUAL[E] | |

[US]:U.S.A. [E]:EUROPE [UK]:U.K. [C]:CANADA [A]:AUSTRALIA [GE]:GENERAL EXPORT [J]:JAPAN

## EXPLODE VIEW-2

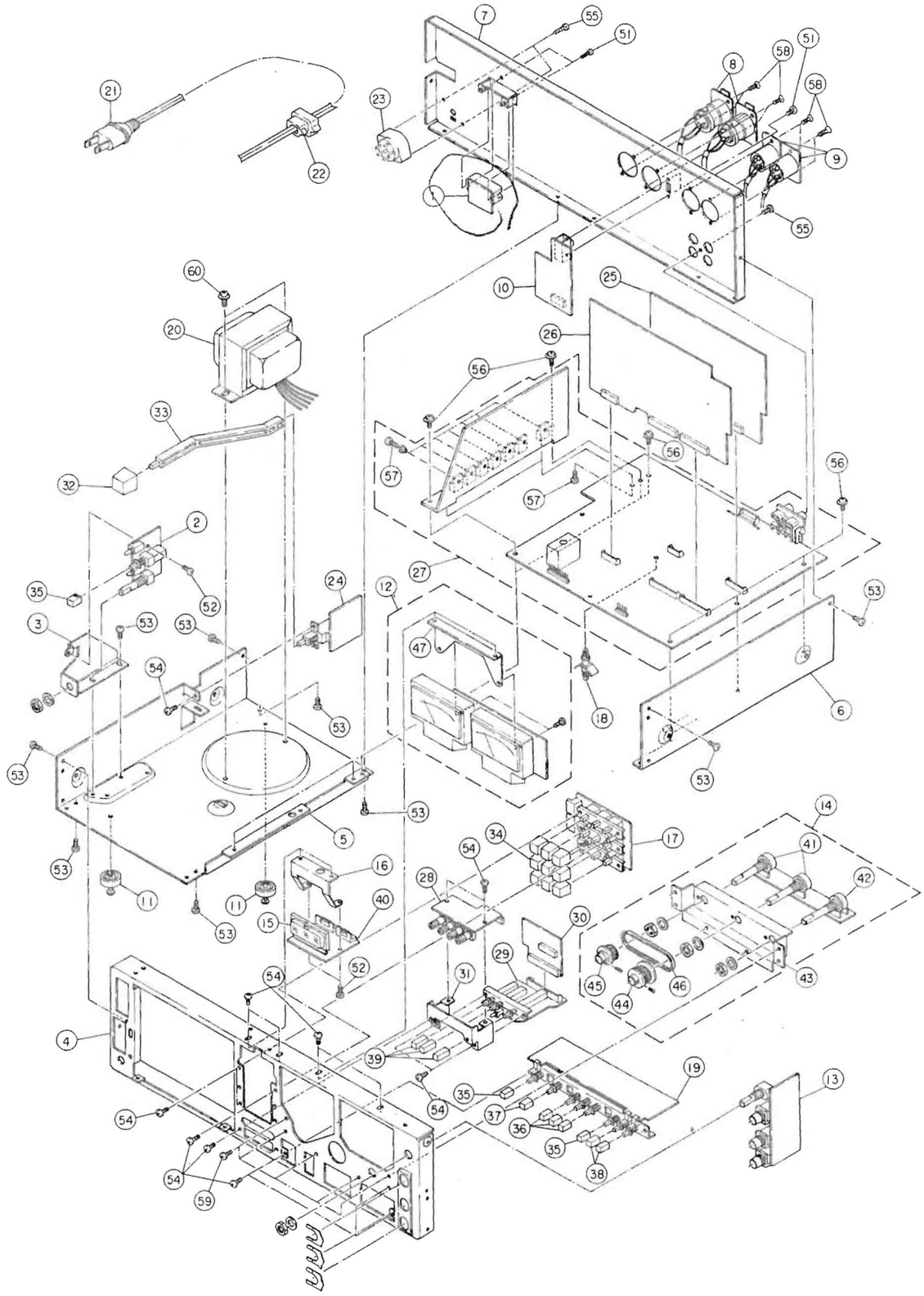

EXPLODED VIEW-2

Parts marked with * require longer delivery time.

| REF.NO. | PART NO. | DESCRIPTION | REMARKS |
|---|---|---|---|
| 2- 1 | *5200195600 | REMOTE CONNECTOR PCB ASSY | |
| 2- 2 | *5200195910 | PITCH CONT PCB ASSY | |
| 2- 3 | *5800825901 | PLATE P.C VR | |
| 2- 4 | *5800826702 | CHASSIS, FRONT | |
| 2- 5 | *5800826300 | CHASSIS, L | |
| 2- 6 | *5800826001 | CHASSIS, R | |
| 2- 7 | *5800826500 | PANEL(B), REAR | |
| 2- 8 | *5334027300 | CONNECTOR,CANNON XLB-3-31 | |
| 2- 9 | *5334027200 | CONNECTOR,CANNON XLB-3-32 | |
| 2-10 | *5200218800 | BAL AMP PCB ASSY | |
| 2-11 | *5730003300 | FOOT, FF-008(P4X6) | |
| 2-12 | *5200218300 | METER PCB ASSY | |
| 2-13 | *5200218400 | H. PHONE PCB ASSY | |
| 2-14 | *5200218900 | VR PCB ASSY | |
| 2-15 | 5312000100 | ELECTRONIC COUNTER; FL4028-06 | |
| 2-16 | *5800824400 | PLATE, COUNTER | |
| 2-17 | *5200218600 | COUNTER SW PCB ASSY | |
| 2-18 | *5787035400 | SUPPORT, PCB LCB-4L | |
| 2-19 | *5200218500 | MONITOR SW PCB ASSY | |
| 2-20 | ⚠*5320043700 | TRANS., POWER [J] | |
| | ⚠*5320043800 | TRANS., POWER [US, C] | |
| | ⚠*5320043900 | TRANS., POWER [GE] | |
| | ⚠*5320044000 | TRANS., POWER [E, UK, A] | |
| 2-21 | ⚠*5128027000 | CORD,AC [J] | |
| | ⚠*5350010700 | CORD,AC [US, C, GE] | |
| | ⚠*5350008200 | CORD,AC [E] | |
| | ⚠*5128047000 | CORD,AC [UK] | |
| | ⚠*5350008300 | CORD,AC [A] | |
| 2-22 | ⚠*5317003400 | BUSHING | |
| 2-23 | ⚠*5302101700 | SW.,VOLTAGE SELECT; FS907G[GE] | |
| 2-24 | *5200218700 | POWER SW PCB ASSY [J, US, C, GE] | |
| | *5200218710 | POWER SW PCB ASSY [E, UK, A] | |
| 2-25 | *5200218100 | PLAY AMP PCB ASSY | |
| 2-26 | *5200218200 | REC AMP PCB ASSY | |
| 2-27 | *5200218000 | MOTHER PCB ASSY [J, US, C, GE] | |
| | *5200218010 | MOTHER PCB ASSY [E, UK, A] | |
| 2-28 | *5200219000 | ADJ VR PCB ASSY | |
| 2-29 | *5200219100 | ADJ SW PCB ASSY | |
| 2-30 | *5200219200 | JOINT PCB ASSY | |
| 2-31 | *5800932900 | PLATE, SW | |
| 2-32 | 5800173100 | BUTTON,POWER | |
| 2-33 | *5800825600 | BAR, LINKING | |
| 2-34 | 5800827901 | BUTTON,P-N07-A | |
| 2-35 | 5800727501 | BUTTON A, PUSH | |
| 2-36 | 5800727601 | BUTTON B, PUSH | |
| 2-37 | 5800727701 | BUTTON B, PUSH | |
| 2-38 | 5800727901 | BUTTON E, PUSH | |
| 2-39 | 5800541600 | KNOB A, ASSIGN | |
| 2-40 | *5620130500 | COUNTER ASSY | |
| 2-41 | 5282016000 | VR, 10KA(R103, R203) | |
| 2-42 | 5282411600 | VR, 10KA X 2(R102) | |
| 2-43 | *5800824600 | BRACKET, VR | |
| 2-44 | *5800933000 | GEAR A ASSY | |
| 2-45 | *5800933500 | GEAR B ASSY | |
| 2-46 | *5800933600 | BELT, TIMING | |
| 2-47 | *5800824500 | PLATE, METER | |

Continued on page 33

[US]:U.S.A. [E]:EUROPE [UK]:U.K. [C]:CANADA [A]:AUSTRALIA [GE]:GENERAL EXPORT [J]:JAPAN

## EXPLODE VIEW-3

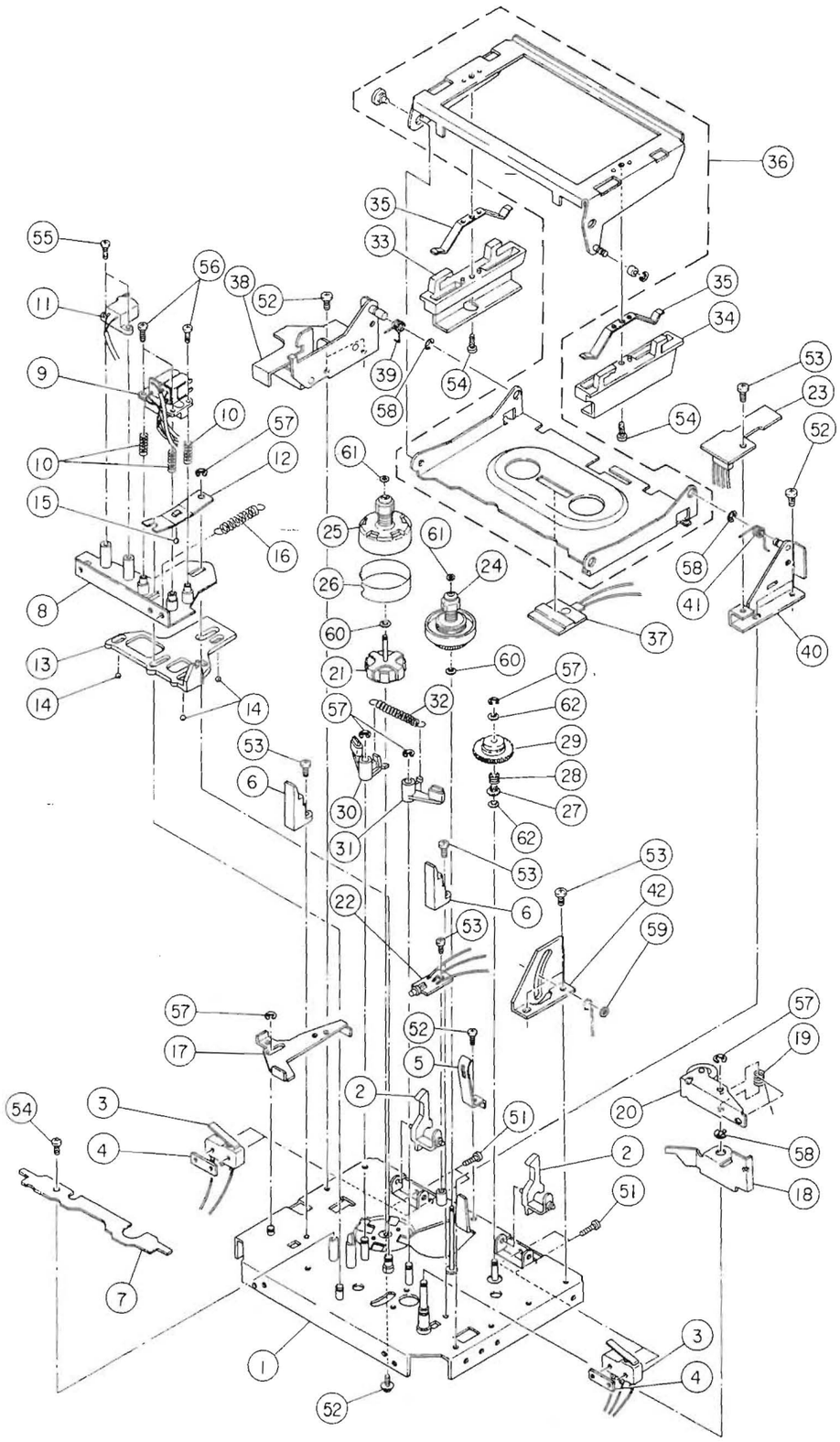

EXPLODED VIEW-3

Parts marked with * require longer delivery time.

| REF.NO. | PART NO. | DESCRIPTION | REMARKS |
|---|---|---|---|
| 3- 1 | *5800930600 | MECHANISM CHASSIS ASSY | |
| 3- 2 | *5800117301 | ARM,SENSOR | |
| 3- 3 | 5301455300 | SW.,MICRO SS-5GL | |
| 3- 4 | *5554447000 | PLATE, SWITCH | |
| 3- 5 | *5800115002 | SPRING, CASSETTE PRESS | |
| 3- 6 | *5800117400 | GUIDE, CASSETTE | |
| 3- 7 | *5800942900 | COVER(B), HEAD | |
| 3- 8 | *5800930901 | HEAD BASE SUB ASSY | |
| 3- 9 | 5800931400 | HEAD ASSY | |
| 3-10 | 5800931300 | SPRING, HEAD | |
| 3-11 | 5378904300 | HEAD, ERASE | |
| 3-12 | *5800114900 | SPG.,BASE PLATE, PRESS | |
| 3-13 | *5800122804 | SLIDER | |
| 3-14 | *5540056000 | STEEL BALL 30 | |
| 3-15 | *5540055000 | STEEL BALL 20 | |
| 3-16 | *5800304100 | SPRING,BASE ARM | |
| 3-17 | *5800119200 | STOPPER | |
| 3-18 | *5800276201 | ARM, SPRING | |
| 3-19 | *5800275100 | SPG.,P.ROLLER | |
| 3-20 | *5800891200 | PINCH ROLLER ASSY | |
| 3-21 | *5800932000 | COIL SHAFT ASSY | |
| 3-22 | *5200219400 | B.T SENSOR PCB ASSY | |
| 3-23 | *5200195500 | SENSER PCB ASSY | |
| 3-24 | 5800108701 | REEL TABLE ASSY; R | |
| 3-25 | 5800932600 | REEL TABLE ASSY: L | |
| 3-26 | *5800932800 | RING, HISS | |
| 3-27 | *5800159100 | HOLDER, SPRING | |
| 3-28 | 5800124300 | SPRING, TENTION | |
| 3-29 | 5800158800 | GEAR ASSY,COUNTER; A | |
| | *(5534282000 | MAGNET) | |
| 3-30 | *5800131601 | BRAKE ARM(L) ASSY | |
| 3-31 | *5800131701 | BRAKE ARM(R) ASSY | |
| 3-32 | 5800114800 | SPRING, BRAKE | |
| 3-33 | *5800109600 | HOLDER, L | |
| 3-34 | *5800122100 | HOLDER, R | |
| 3-35 | *5800115402 | SPRING, PRESS, HALF | |
| 3-36 | *5800891001 | CASSETTE HOLDER SUB ASSY | |
| 3-37 | 5225015100 | LED,SLF301C | |
| 3-38 | *5800824700 | HOLDER PLATE L ASSY | |
| 3-39 | *5800115500 | SPRING, HOLDER;L | |
| 3-40 | *5800159202 | HOLDER PLATE(R) ASSY | |
| 3-41 | 5800115600 | SPRING, HOLDER;R | |
| 3-42 | *5800119000 | GUIDE PLATE,HOLDER | |
| 3-51 | *5780002010 | SCREW, BIND M2X10 | |
| 3-52 | *5783002605 | SCREW, S TITE PAN 2.6X5 | |
| 3-53 | *5783032606 | SCREW, S TITE 2.6X6 | |
| 3-54 | *5780022004 | SCREW, BIND M2X4 | |
| 3-55 | *5780002006 | SCREW, BIND M2X6 | |
| 3-56 | *5780002008 | SCREW, M2X8 | |
| 3-57 | *5786002000 | E RING, E-2 | |
| 3-58 | *5786003000 | E RING, E-3 | |
| 3-59 | *5786331500 | POLYSLIDER, 1.5X4X0.5T CUT | |
| 3-60 | *5785301100 | POLYSLIDER 1.5X4X0.25T | |
| 3-61 | *5785331100 | POLYSLIDER, 1.2X3.6X0.5T CUT | |
| 3-62 | *5785303000 | POLYSLIDER, 3.2X5.5X0.25T | |

## EXPLODE VIEW-4

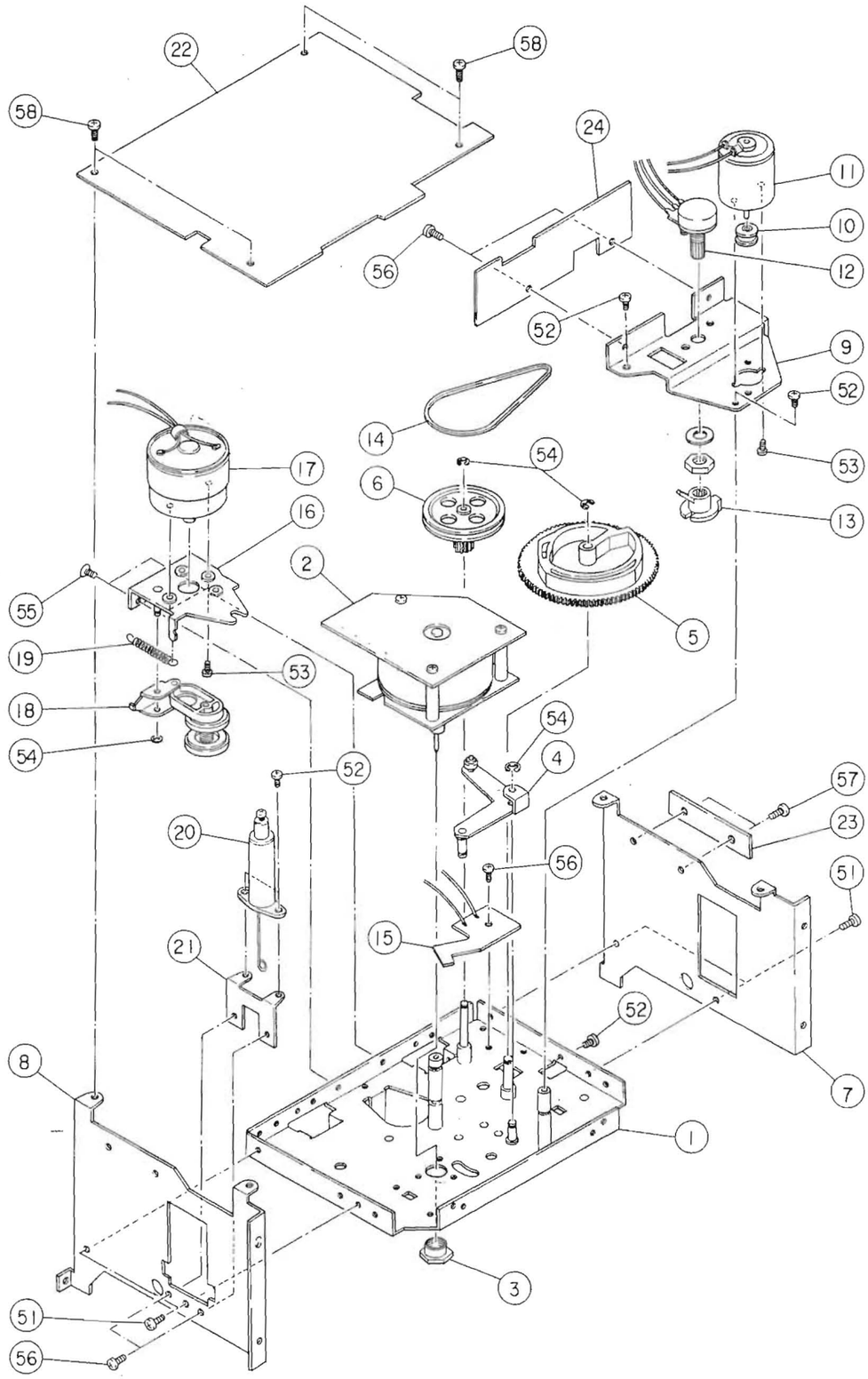

EXPLODED VIEW-4

Parts marked with * require longer delivery time.

| REF.NO. | PART NO. | DESCRIPTION | REMARKS |
|---|---|---|---|
| 4- 1 | *5800930600 | MECH CHASSIS ASSY | |
| 4- 2 | 5370007500 | MOTOR, DC CAPSTAN | |
| 4- 3 | *5800239200 | NUT,MOTOR HOLDER | |
| 4- 4 | *5800938100 | BASE ARM ASSY | |
| 4- 5 | 5800122700 | CAM, CONTROL | |
| 4- 6 | 5800117200 | PULLEY, REDUCTION | |
| 4- 7 | *5800825701 | PLATE(L), MECHANISM | |
| 4- 8 | *5800825801 | PLATE(R), MECHANISM | |
| 4- 9 | *5800122200 | PLATE, HOLDER, MOTOR | |
| 4-10 | 5800123300 | PULLEY,V | |
| 4-11 | 5370001400 | MOTOR, DC, CONTROL | |
| 4-12 | 5282009600 | VR.,10KB | |
| 4-13 | *5800116700 | JOINT | |
| 4-14 | 5800106800 | BELT, CONTROL | |
| 4-15 | *5210219500 | B. T. JOINT PCB | |
| 4-16 | *5800121801 | BRACKET, SUB ASSY, MOTOR | |
| 4-17 | 5370001200 | DC REEL MOTOR ASSY | |
| 4-18 | 5800107802 | IDLER ASSY | |
| 4-19 | 5800115800 | SPRING, IDLER ARM | |
| 4-20 | 5800131802 | DAMPER ASSY | |
| 4-21 | *5800941200 | BRACKET, DAMPER | |
| 4-22 | *5200195410 | CONTROL PCB ASSY | |
| 4-23 | *5800833900 | PLATE, PRESSURE | |
| 4-24 | *5200219300 | B.T CONT PCB ASSY | |
| 4-51 | *5783003005 | SCREW, S TITE 3X5 | |
| 4-52 | *5783002606 | SCREW, S TITE 2.6X6 | |
| 4-53 | *5780002603 | SCREW,BIND M2.6X3 | |
| 4-54 | *5786002000 | E RING, E-2 | |
| 4-55 | *5783042605 | SCREW, FLAT S TITE 2.6X5 | |
| 4-56 | *5783032605 | SCREW, S TITE BIND 2.6X5 | |
| 4-57 | *5780003008 | SCREW,BIND M3X8 | |
| 4-58 | *5780003005 | SCREW, BIND M3X5 | |

Continued from page 29

EXPLODED VIEW-2

| REF.NO. | PART NO. | DESCRIPTION | REMARKS |
|---|---|---|---|
| 2-51 | *5783002608 | SCREW, PAN S TITE 3X8 | |
| 2-52 | *5780002605 | SCREW, BIND M2.6X5 | |
| 2-53 | *5783003005 | SCREW, PAN S TITE 3X5 | |
| 2-54 | *5780003005 | SCREW, BIND M3X5 | |
| 2-55 | *5783603008 | SCREW, P TITE 3X8 | |
| 2-56 | *5783623008 | SCREW, FLANGED M3.0X8 | |
| 2-57 | *5780003006 | SCREW, BIND M3X6 | |
| 2-58 | *5783653006 | SCREW, S TITE FLAT 3X6(NI) | |
| 2-59 | *5780003003 | SCREW, BIND M3X3 | |
| 2-60 | *5783074006 | SCREW, FLANGED S TITE 4X6 | |

# 8. PC BOARDS AND PARTS LISTS

## 基板図とパーツ・リスト

### CONTROL PCB ASSY

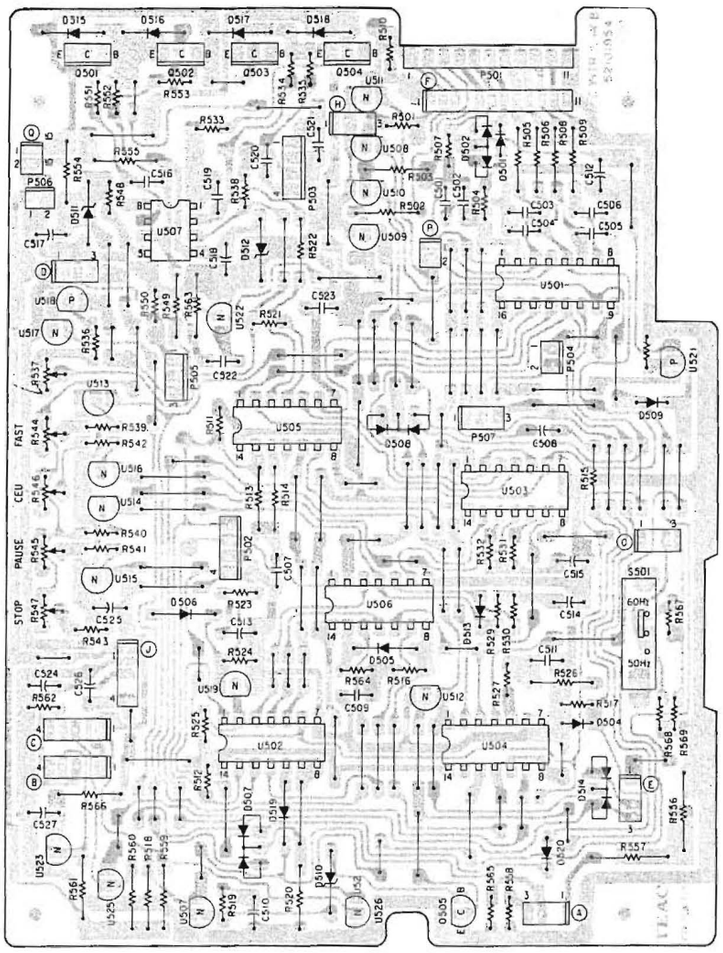

### PITCH CONTROL PCB ASSY

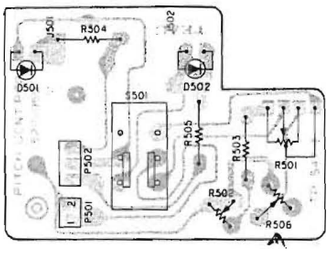

DIGITAL TRANSISTOR

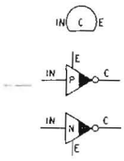

### SENSOR PCB ASSY

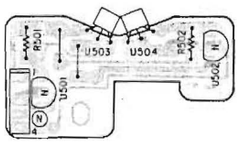

### OPERATION SW PCB ASSY

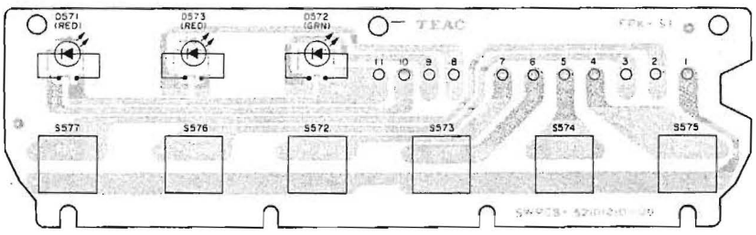

### REMOTE CONNECTOR PCB ASSY

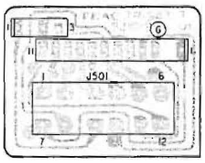

## REC AMPL PCB ASSY

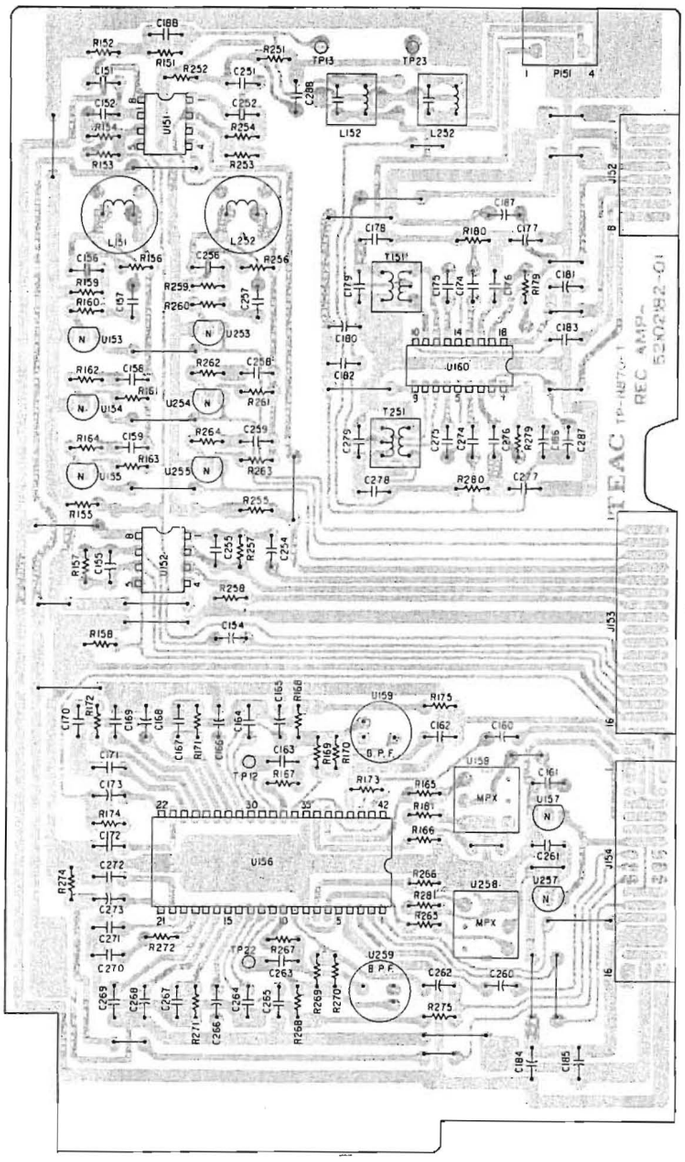


## PLAY AMPL PCB

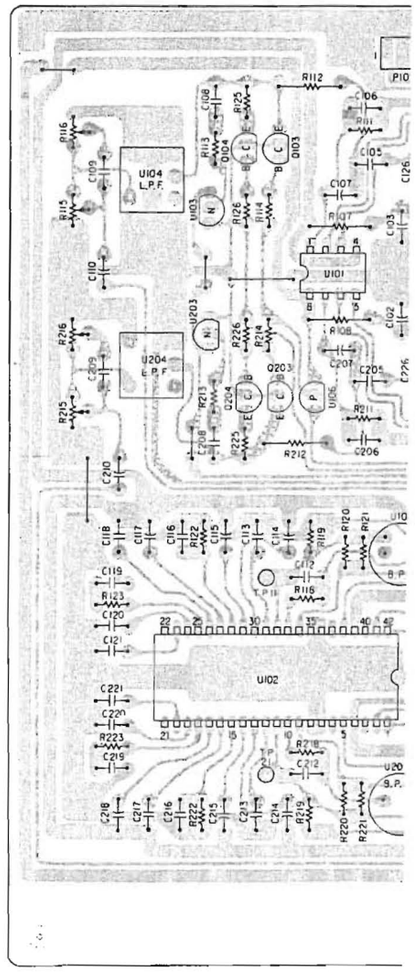


## B.T. JOINT PCB

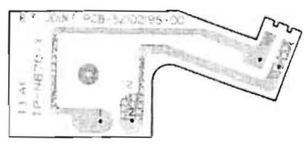

DIGITAL TRANSISTOR

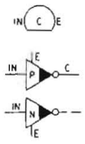

ASSY

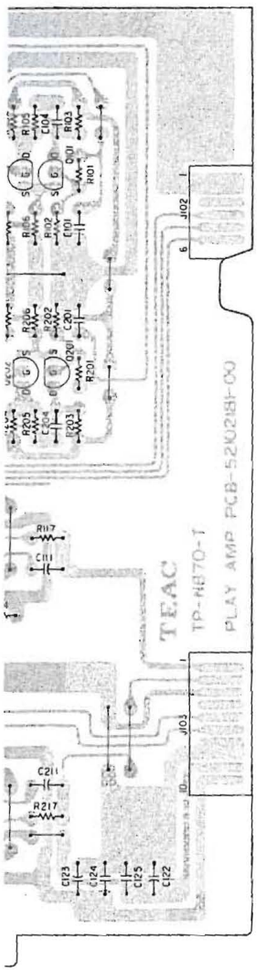


SENSOR PCB ASSY

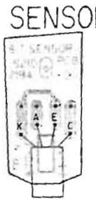

B.T. CONTROL PCB ASSY

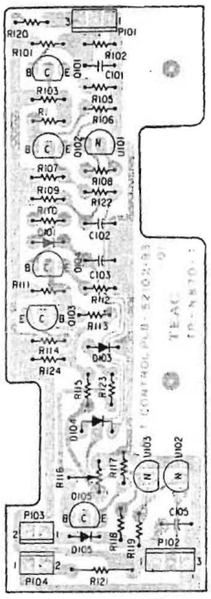

COUNTER SW PCB ASSY

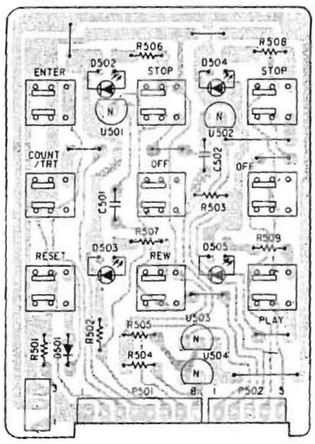


JOINT PCB ASSY

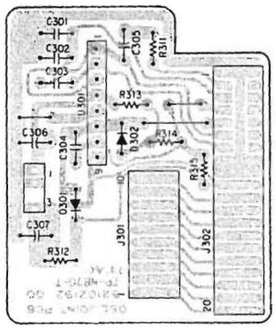

ADJUSTMENT SW PCB ASSY

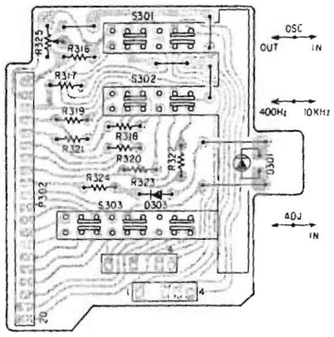


ADJUSTMENT VR PCB ASSY

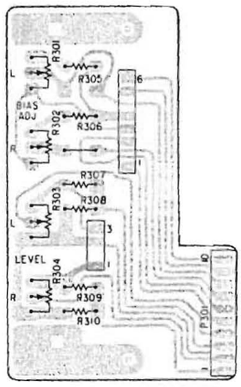

VR PCB ASSY

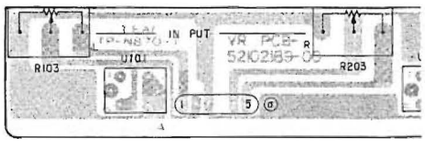


MOTHER PCB ASSY

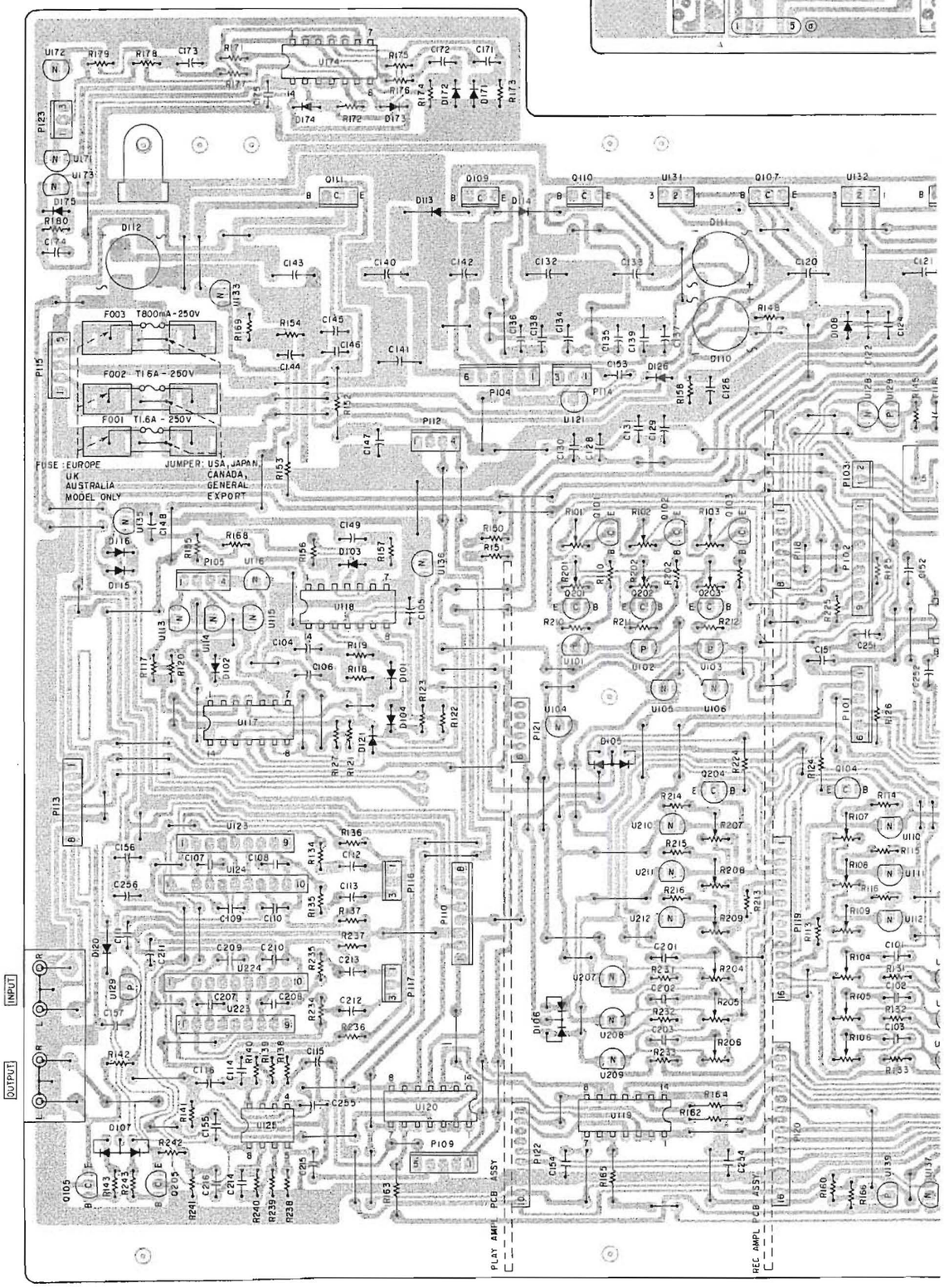

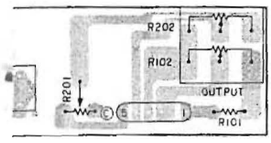


METER PCB ASSY

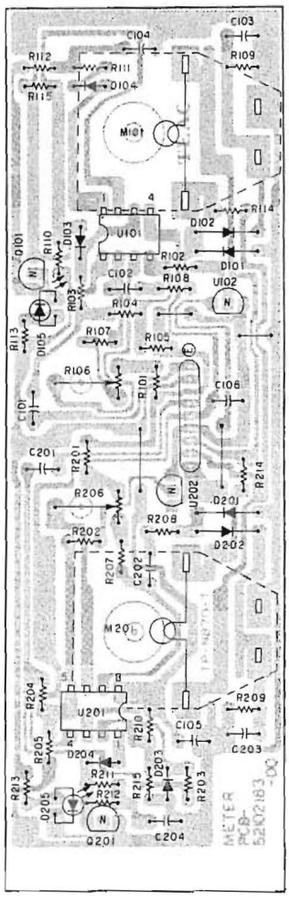


MONITOR SWITCH PCB ASSY

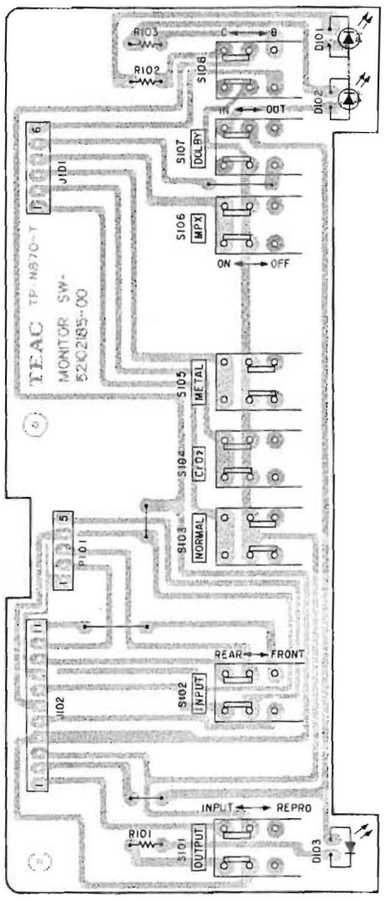


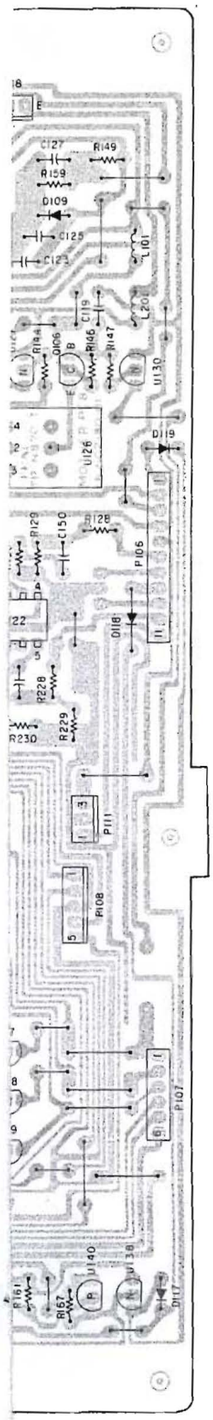


DIGITAL TRANSISTOR

HEADPHONE PCB ASSY

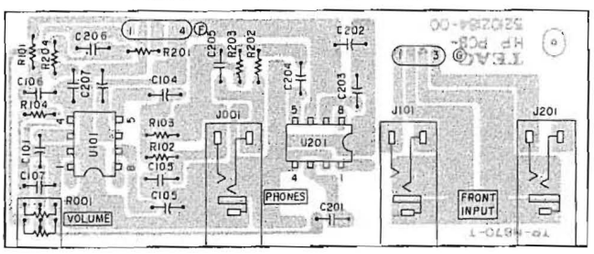


BAL. AMPL PCB ASSY

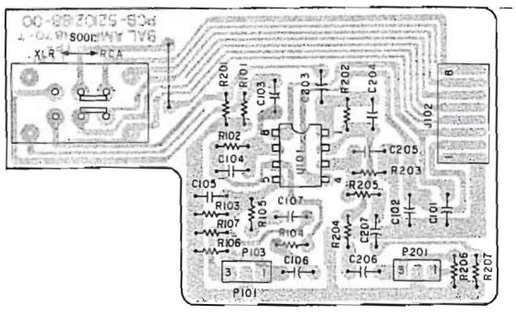


POWER SW PCB ASSY

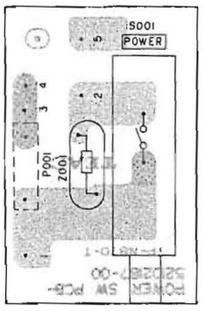

CONTROL PCB ASSY

| REF.NO. | PART NO. | DESCRIPTION |
|---|---|---|
| | *5200195410 | CONTROL PCB ASSY |
| | *5210195400 | CONTROL PCB |
| D501 | 5224015020 | DIODE,1SS133T-77 |
| D502 | 5224015120 | DIODE,MC911 |
| D504 | 5224015020 | DIODE,1SS133T-77 |
| D505 | 5224012920 | DIODE,1S2473 |
| D506 | 5224012920 | DIODE,1S2473 |
| D507 | 5224015220 | DIODE,MC921 |
| D508 | 5224015220 | DIODE,MC921 |
| D509 | 5224015020 | DIODE,1SS133T-77 |
| D510 | 5224540901 | DIODE,ZENER RD6.2EB2 FR |
| D511 | 5224543101 | DIODE,ZENER RD12EB2 FR |
| D512 | 5224543101 | DIODE,ZENER RD12EB2 FR |
| D513 | 5224015020 | DIODE,1SS133T-77 |
| D514 | 5224015220 | DIODE,MC921 |
| D515 | 5143089000 | DIODE,W03C |
| D516 | 5143089000 | DIODE,W03C |
| D517 | 5143089000 | DIODE,W03C |
| D518 | 5143089000 | DIODE,W03C |
| D519 | 5224012920 | DIODE,1S2473 |
| D520 | 5224015020 | DIODE,1SS133T-77 |
| P501 | 5336213100 | CON.,PLUG 5089-11A |
| P502 | 5336126400 | CON.,PLUG WHT |
| P503 | 5336137400 | CON.,PLUG 8263-0412 |
| P504 | 5336126200 | CON.,PLUG WHT |
| P505 | 5336126300 | CON.,PLUG WHT |
| P506 | 5336137200 | CON.,PLUG BLK |
| P507 | 5336135200 | CON.,PLUG RED |
| Q501 | 5230781400 | SI.TR.2SC3421(0) 10 120 |
| Q502 | 5230019300 | TR.,2SA1358(0) 10 120 |
| Q503 | 5230781400 | SI.TR.2SC3421(0) 10 120 |
| Q504 | 5230019300 | TR.,2SA1358(0) 10 120 |
| Q505 | 5230779520 | SI.TR.2SC1815GR 0.4 80 |
| R537 | *5150156000 | R., TRIMMER 50KB |
| R544 | 5150154000 | R.,TRIMMER 10KB |
| R545 | 5150152000 | R.,TRIMMER 2KB 8MM |
| R546 | 5150152000 | R.,TRIMMER 2KB 8MM |
| R547 | 5150152000 | R.,TRIMMER 2KB 8MM |
| R554 | ⚠5183590000 | R.,CARBON INCOMBUST.330 |
| R555 | ⚠5183590000 | R.,CARBON INCOMBUST.330 |
| R556 | ⚠5185692000 | R.,CARBON INCOMBUST.150 |
| R557 | ⚠5185692000 | R.,CARBON INCOMBUST.150 |
| S501 | 5300913800 | SW.,SLIDE 1-2 S SSU11 |
| U501 | 5220020400 | IC.,BA843, |
| U502 | 5220019100 | IC.,TC4011BP, |
| U503 | 5220019000 | IC.,TC4001BP, |
| U504 | 5220016100 | IC.,HD14013BP, |
| U505 | 5220020200 | IC.,TC4030BP, |
| U506 | 5220017200 | IC.,HD14069UBP, |
| U507 | 5220418800 | IC,M5218P |
| U508 | 5232252520 | TR.,DIGITAL RT1N241S |
| U509 | 5232252520 | TR.,DIGITAL RT1N241S |
| U510 | 5232252520 | TR.,DIGITAL RT1N241S |
| U511 | 5232252520 | TR.,DIGITAL RT1N241S |
| U512 | 5232252520 | TR.,DIGITAL RT1N241S |
| U513 | 5232252520 | TR.,DIGITAL RT1N241S |
| U514 | 5232252520 | TR.,DIGITAL RT1N241S |
| U515 | 5232252520 | TR.,DIGITAL RT1N241S |
| U516 | 5232252520 | TR.,DIGITAL RT1N241S |
| U517 | 5232252520 | TR.,DIGITAL RT1N241S |
| U518 | 5232252620 | TR.,DIGITAL RT1P241S |
| U519 | 5232252520 | TR.,DIGITAL RT1N241S |
| U521 | 5232252620 | TR.,DIGITAL RT1P241S |
| U523 | 5232252520 | TR.,DIGITAL RT1N241S |
| U525 | 5232252520 | TR.,DIGITAL RT1N241S |
| U526 | 5232252520 | TR.,DIGITAL RT1N241S |
| U527 | 5232252520 | TR.,DIGITAL RT1N241S |

OPERATION SW PCB ASSY

| REF.NO. | PART NO. | DESCRIPTION |
|---|---|---|
| | *5200121010 | OPERATION SW PCB ASSY |
| | *5210121001 | OPERATION SW PCB |
| | 5302101400 | SW.,TACT KHJ10905 |
| | 5225010100 | LED,SLP-155B RED |
| | 5225010200 | LED,SLP-255B GRN |

SENSOR PCB ASSY

| REF.NO. | PART NO. | DESCRIPTION |
|---|---|---|
| | *5200195500 | SENSER PCB ASSY |
| | *5210195500 | SENSER, PCB |
| U501 | 5232252520 | TR.,DIGITAL RT1N241S |
| U502 | 5232252520 | TR.,DIGITAL RT1N241S |
| U503 | 5228700100 | IC,DN6838 |
| U504 | 5228700100 | IC,DN6838 |

REMOTE CONNECTOR PCB ASSY

| REF.NO. | PART NO. | DESCRIPTION |
|---|---|---|
| | *5200195600 | REMOTE CON., PCB ASSY |
| | *5210195601 | REMOTE CONNECTOR PCB |
| J501 | 5334010100 | SOCKET,12P CONN |

PITCH CONT PCB ASSY R506-5280132702

| REF.NO. | PART NO. | DESCRIPTION |
|---|---|---|
| | *5200195910 | PITCH CONT PCB ASSY |
| | *5210195900 | PITCH CONT PCB |
| D501 | 5225006900 | LED,PR3432S RED |
| D502 | 5225014400 | LED,PG3432SY GRN |
| J501 | 5122373000 | CON.,SOCKET 3024-2AH |
| J502 | 5122373000 | CON.,SOCKET 3024-2AH |
| P501 | 5336128200 | CON.,PLUG WHT |
| P502 | 5336128300 | CON.,PLUG WHT |
| R501 | 5282016700 | R., TRIMMER 1S1UVR 100KB |
| R504 | 5181474000 | R.,CARBON 470OHM J FT |
| R505 | 5181474000 | R.,CARBON 470OHM J FT |

Parts marked with * require longer delivery time.

REC AMP PCB ASSY

| REF.NO. | PART NO. | DESCRIPTION |
|---|---|---|
| | *5200218200 | REC AMP PCB ASSY |
| | *5210218200 | REC AMP PCB |
| J152 | 5336277800 | CON., SOCKET 5513-08APB |
| J153 J154 | 5336278600 | CON., SOCKET 5513-16APB |
| L151 L251 | 5286008700 | COIL, CHOKE 8.2MH |
| L152 L252 | 5286000200 | COIL,TRAP 100KHZ |
| P151 | 5336139400 | CON., PLUG 8263-0411 RED |
| T151 T251 | 5286025700 | COIL,STEP UP |
| TP12 TP22 | 5544750000 | PIN,CONBINATION |
| TP13 TP23 | 5544750000 | PIN,CONBINATION |
| U151 | 5220414300 | IC.,NJM4560 |
| U152 | 5220414300 | IC.,NJM4560 |
| U153 U253 | 5232252520 | TR.,DIGITAL RT1N241S |
| U154 U254 | 5232252520 | TR.,DIGITAL RT1N241S |
| U155 U255 | 5232252520 | TR.,DIGITAL RT1N241S |
| U156 | 5220427000 | IC.,CX20187, |
| U157 U257 | 5232252520 | TR.,DIGITAL RT1N241S |
| U158 U258 | 5292805600 | FILTER,LOWPASS MPX |
| U159 U259 | 5292806000 | FILTER,L.P 19.8KHZ |
| U160 | 5220430400 | IC.,UPC1297CA |

PLAY AMP PCB ASSY

| REF.NO. | PART NO. | DESCRIPTION |
|---|---|---|
| | *5200218100 | PLAY AMP PCB ASSY |
| | *5210218100 | PLAY AMP PCB |
| J102 | 5336277600 | CON., SOCKET 5513-06APB |
| J103 | 5336278000 | CON., SOCKET 5513-06APB |
| P101 | 5336128300 | CON., PLUG 8263-0311 WHT |
| Q101 Q201 | 5145103000 | FET,2SK-68A-M 0.25 150 |
| Q102 Q202 | 5145103000 | FET,2SK-68A-M 0.25 150 |
| Q103 Q203 | 5230775000 | SI.TR.2SC2878-B 0.4 30 |
| Q104 Q204 | 5230780920 | SI.TR.2SC2603F 0.3 200 |
| R107 R108 | ⚠5183590000 | R.,INCOMBUST. 30 OHM FR |
| R115 R215 | 5150154000 | R.,TRIMMER 10KB |
| R116 R216 | 5150156000 | R., TRIMMER, 50KB |
| TP11 TP21 | 5544750000 | PIN,CONBINATION |
| U101 | 5220412500 | IC.,NJM4562 |
| U102 | 5220427000 | IC.,CX20187, |
| U103 U203 | 5232252520 | TR.,DIGITAL RT1N241S |
| U104 U204 | 5292805700 | FILTER,LOWP.100KHZ |
| U105 U205 | 5292806000 | FILTER,L.P 19.8KHZ |
| U106 | 5232252620 | TR.,DIGITAL RT1P241S |

B.T CONT PCB ASSY

| REF.NO. | PART NO. | DESCRIPTION |
|---|---|---|
| | *5200219300 | B.T CONT PCB ASSY |
| | *5210219300 | B.T CONT PCB |
| D101 | 5224015020 | DIODE,1SS133T-77 |
| D103 | 5224015020 | DIODE,1SS133T-77 |
| D104 | 5224015220 | DIODE,MC921 |
| D105 | 5224015020 | DIODE,1SS133T-77 |
| P101 | 5336126300 | CONNECTOR, PLUG WHT |
| P102 | 5336135300 | CONNECTOR, PLUG RED |
| P103 | 5336126200 | CONNECTOR, PLUG WHT |
| P104 | 5336137200 | CONNECTOR, PLUG BLK |
| Q101 | 5230781120 | SI.TR.2SC1740SLN |
| Q102 | 5230781120 | SI.TR.2SC1740SLN |
| Q103 | 5230019020 | TR.,2SA933SLN 0.3 140 |
| Q104 | 5230781120 | SI.TR.2SC1740SLN |
| Q105 | 5231761300 | SI.TR.2SD734F 0.6 250 |
| R116 | 5280020700 | VR.,SEMI FIXED 1KB |
| U101 | 5232252520 | TR.,DIGITAL RT1N241S |
| U102 | 5232252520 | TR.,DIGITAL RT1N241S |
| U103 | 5232252520 | TR.,DIGITAL RT1N241S |

JOINT PCB ASSY

| REF.NO. | PART NO. | DESCRIPTION |
|---|---|---|
| | *5200219200 | JOINT PCB ASSY |
| | *5210219200 | JOINT PCB |
| C301 | 5170352000 | C.,MYLAR 0.001MF/100V JT |
| C302 | 5171856000 | 0.010UF 100V J VT |
| C303 | 5171856000 | 0.010UF 100V J VT |
| C304 | 5171856000 | 0.010UF 100V J VT |
| C305 | 5260266850 | C.,ELEC. 22UF 25V M SME |
| C306C307 | 5260266850 | C.,ELEC. 22UF 25V M SME |
| D301 | 5224015020 | DIODE,1SS133T-77 |
| D302 | 5224015020 | DIODE,1SS133T-77 |
| J301 | 5336278000 | CON.,SOCKET 5513-10APB |
| J302 | 5336279000 | CON.,SOCKET 5513-20APB |
| R311 | 5240030120 | R.,CARBON R20 6.2K FT |
| R312 | 5240029220 | R.,CARBON 2.7K R-10 T |
| R313 | 5240029820 | R.,CARBON 4.7K R-10 T |
| R314 | 5240028220 | R.,CARBON 1K R10 T |
| R315 | 5240028220 | R.,CARBON 1K R10 T |
| U301 | 5220416200 | IC.,M5218L, |

ADJ SW PCB ASSY

| REF.NO. | PART NO. | DESCRIPTION |
|---|---|---|
| | *5200219100 | ADJ SW PCB ASSY |
| | *5210219100 | ADJ SW PCB |
| D301 | 5225006900 | LED,PR3432S RED MU-20 |
| D303 | 5224015020 | DIODE,1SS133T-77 |
| J301 | 5122373000 | CON.,SOCKET 3024-2AH |
| P302 | 5336276000 | CON.,PLUG 5512-20A |
| R325 | 5280021100 | R., TRIMMER 4.7KB |
| S301 | 5300045900 | SW.,PUSH 3G SPUJ30 |

Parts marked with * require longer delivery time.

COUNTER SW PCB ASSY

| REF.NO. | PART NO. | DESCRIPTION |
|---|---|---|
| | *5200218600 | COUNTER SW PCB ASSY |
| | *5210218600 | COUNTER SW PCB |
| | *5800942700 | LED SPACER L=11 |
| D501 | 5224015020 | DIODE,1SS133T-77 |
| D502-D505 | 5225017100 | LED,TLR226 |
| P501 | 5336212800 | CON., PLUG 5089-8A |
| P502 | 5336210500 | CON., PLUG 5129-5A |
| P503-D506 | 5336115200 | CON., SOCKET |
| S501 | 5300046000 | SW.,PUSH 3G SPUZ32-LBWLB |
| S502 S503 | 5300046100 | SW.,PUSH 3G SPUZ32-SRS |
| U501 | 5232252520 | TR.,DIGITAL RT1N241S |
| U502 | 5232252520 | TR.,DIGITAL RT1N241S |
| U503 | 5232252520 | TR.,DIGITAL RT1N241S |
| U504 | 5232252520 | TR.,DIGITAL RT1N241S |

ADJ VR PCB ASSY

| REF.NO. | PART NO. | DESCRIPTION |
|---|---|---|
| | *5200219000 | ADJ VR PCB ASSY |
| | *5210219000 | ADJ VR PCB |
| P301 | 5336275000 | CON.,PLUG 5512-10A |
| R301-R304 | 5283505800 | R.,TRIMMER 10KBX4 |

B.T. SENSOR PCB ASSY

| REF.NO. | PART NO. | DESCRIPTION |
|---|---|---|
| | *5200219400 | B.T. SENSOR PCB ASSY |
| | *5210219400 | B.T. SENSOR PCB |
| Q104 | 5228011600 | PHOTO-REFLECTOR |
| | 5800735900 | SPACER |

MOTHER PCB ASSY

| REF.NO. | PART NO. | DESCRIPTION |
|---|---|---|
| | *5200218000 | MOTHER PCB ASSY [J, US, C, GE] |
| | *5200218010 | MOTHER PCB ASSY [E, UK, A] |
| | *5210218000 | MOTHER PCB |
| | *5332015800 | HOLDER, FUSE [E, UK, A] |
| | *5033291000 | PLATE,INSULATOR |
| | *5033295000 | TUBE,INSULATOR |
| | *5800933700 | HEAT SINK |
| | *5555590000 | PLATE.PCB EARTH;A |
| | 5330509600 | JACK,4P |
| C120 C121 | ⚠5260272210 | 3300UF 25V M SME VF |
| C132 C133 | ⚠5260272210 | 3300UF 25V M SME VF |
| C140 C141 | ⚠5260272210 | 3300UF 25V M SME VF |
| C142 | ⚠5260271010 | 1000UF 25V M SME VF |
| C143 | ⚠5260272110 | 3300UF 16V M SME VF |
| C147 | ⚠5260271510 | 2200UF 16V M SME VF |
| D101 | 5224015020 | DIODE,1SS133T-77 |
| D102 | 5224015020 | DIODE,1SS133T-77 |
| D103 | 5224015020 | DIODE,1SS133T-77 |
| D104 | 5224015020 | DIODE,1SS133T-77 |
| D105 | 5224015120 | DIODE,MC911 |
| D106 | 5224015220 | DIODE,MC921 |
| D107 | 5224015120 | DIODE,MC911 |
| D108 | 5143089000 | DIODE,W03C |
| D109 | 5143089000 | DIODE,W03C |
| D110-D112 | ⚠5228005000 | SILICON STACK W02 |
| D113 D114 | ⚠5143089000 | DIODE,W03C |
| D115-D117 | 5224015020 | DIODE,1SS133T-77 |
| D118 | 5224012920 | DIODE,1S2473 |
| D119 | 5224015020 | DIODE,1SS133T-77 |
| D120 | 5224012920 | DIODE,1S2473 |
| D121 | 5224015020 | DIODE,1SS133T-77 |
| D126 | 5224015020 | DIODE,1SS133T-77 |
| D171-D175 | 5224015020 | DIODE,1SS133T-77 |
| F001-F002 | ⚠5142188000 | FUSE,1.6A-250V (T) [E, UK, A] |
| | 5181209000 | JUMPER WIRE P=20 [J, US, C, GE] |
| F003 | ⚠5142186000 | FUSE,MINI.800MA (T) [E, UK, A] |
| | 5181765000 | JUMPER WIRE P=15 [J, US, C, GE] |
| L101 L201 | 5286002100 | COIL,CHOKE 1.5MH |
| P101 | 5336126600 | CON.,PLUG WHT |
| P102 | 5336126900 | CON.,PLUG 8263-0912 WHT |

Parts marked with * require longer delivery time.

[US]:U.S.A. [E]:EUROPE [UK]:U.K. [C]:CANADA [A]:AUSTRALIA [GE]:GENERAL EXPORT [J]:JAPAN

| | | |
|---|---|---|
| P103 | 5336135200 | CON.,PLUG 8263-0212 RED |
| P104 | 5336135600 | CON.,PLUG 8263-0612 RED |
| P105 | 5336126400 | CON.,PLUG WHT |
| P106 | 5122363000 | CON., M 11P |
| P107 | 5122358000 | CON., M 6P |
| P108 | 5336126500 | CON.,PLUG WHT |
| P109 | 5336126500 | CON.,PLUG WHT |
| P110 | 5336126800 | CON.,PLUG 8263-0812 WHT |
| P111 | 5336126300 | CON.,PLUG 8263-0312 WHT |
| P112 | 5336126400 | CON.,PLUG WHT |
| P113 | 5336274800 | CON.,PLUG 5512-08A |
| P114 | 5336126300 | CON.,PLUG 8263-0312 WHT |
| P115 | 5122129000 | CON.,PLUG 5045-05A W |
| P116 | 5336126300 | CON.,PLUG 8263-0312 WHT |
| P117 | 5336135300 | CON.,PLUG 8263-0312 RED |
| P118 | 5336274800 | CON.,PLUG 5512-08A |
| P119 | 5336275600 | CON.,PLUG 5512-16A |
| P120 | 5336275600 | CON.,PLUG 5512-16A |
| P121 | 5336274600 | CON.,PLUG 5512-06A |
| P122 | 5336275000 | CON.,PLUG 5512-10A |
| P123 | 5336126300 | CON.,PLUG 8263-0312 WHT |
| Q101Q201 | 5230775020 | TR 2SC2878-B |
| Q102Q202 | 5230775020 | TR 2SC2878-B |
| Q103Q203 | 5230775020 | TR 2SC2878-B |
| Q104Q204 | 5230775020 | TR 2SC2878-B |
| Q105Q205 | 5230775020 | TR 2SC2878-B |
| Q106 | 5231761300 | SI.TR.2SD734F 0.6 250 |
| Q107 | ⚠5145087000 | SI.TR.2SD-313E 30 8 |
| Q108 | ⚠5145129000 | SI.TR.2SB-507 30 8 |
| Q109 | ⚠5145087000 | SI.TR.2SD-313E 30 8 |
| Q110 | ⚠5145129000 | SI.TR.2SB-507 30 8 |
| Q111 | ⚠5145087000 | SI.TR.2SD-313E 30 8 |
| Q112 | 5230508400 | SI.TR.2SB698F 0.6 250 |
| R101R201 | 5280021300 | VR, SEMIVARIABLE 10KB |
| R102R202 | 5280021300 | VR, SEMIVARIABLE 10KB |
| R103R203 | 5280021300 | VR, SEMIVARIABLE 10KB |
| R104R204 | 5280021700 | VR, SEMIVARIABLE 47KB |
| R105R205 | 5280021700 | VR, SEMIVARIABLE 47KB |
| R106R206 | 5280021700 | VR, SEMIVARIABLE 47KB |
| R107R207 | 5280021700 | VR, SEMIVARIABLE 47KB |
| R108R208 | 5280021700 | VR, SEMIVARIABLE 47KB |
| R109R209 | 5280021700 | VR, SEMIVARIABLE 47KB |
| R150 R151 | ⚠5183578000 | R., 100 OHM INCOMBUST. |
| R152 | ⚠5181984000 | R., 270 OHM INCOMBUST. |
| U101 | 5232252620 | TR.,DIGITAL RT1P241S |
| U102 | 5232252620 | TR.,DIGITAL RT1P241S |
| U103 | 5232252620 | TR.,DIGITAL RT1P241S |
| U104 | 5232252520 | TR.,DIGITAL RT1N241S |
| U105 | 5232252520 | TR.,DIGITAL RT1N241S |
| U106 | 5232252520 | TR.,DIGITAL RT1N241S |
| U107 U207 | 5232252520 | TR.,DIGITAL RT1N241S |
| U108 U208 | 5232252520 | TR.,DIGITAL RT1N241S |
| U109 U209 | 5232252520 | TR.,DIGITAL RT1N241S |
| U110 U210 | 5232252520 | TR.,DIGITAL RT1N241S |
| U111 U211 | 5232252520 | TR.,DIGITAL RT1N241S |
| U112 U212 | 5232252520 | TR.,DIGITAL RT1N241S |
| U113 | 5232252520 | TR.,DIGITAL RT1N241S |
| U114 | 5232252520 | TR.,DIGITAL RT1N241S |
| U115 | 5232252520 | TR.,DIGITAL RT1N241S |
| U116 | 5232252520 | TR.,DIGITAL RT1N241S |
| U117 | 5220019000 | IC.,TC4001BP |
| U118 | 5220019100 | IC.,TC4011BP |
| U119 | 5220419400 | IC.,LC4066B |
| U120 | 5220419400 | IC.,LC4066B |
| U121 | 5232252520 | TR.,DIGITAL RT1N241S |
| U122 | 5220414300 | IC.,NJM4560 |
| U123 U223 | 5220431100 | IC.,NJM5532S |
| U124 U224 | 5242117800 | R.,ARRAY RMN Z8178 |
| U125 | 5220414300 | IC.,NJM4560 |
| U126 | 5292204800 | MODULE,OSC |
| U127 | 5232252520 | TR.,DIGITAL RT1N241S |
| U128 | 5232252520 | TR.,DIGITAL RT1N241S |
| U129 | 5232256500 | TR.,DIGITAL 2SA 1527 |
| U130 | 5232252520 | TR.,DIGITAL RT1N241S |
| U131 | ⚠5220413000 | IC.,NJM78M12A, |
| U132 | ⚠5220420400 | IC,NJM79M12A |
| U133 | 5232252520 | TR.,DIGITAL RT1N241S |
| U134 | 5232252620 | TR.,DIGITAL RT1P241S |
| U135 | 5232252520 | TR.,DIGITAL RT1N241S |
| U136 | 5232252520 | TR.,DIGITAL RT1N241S |
| U137 | 5232252520 | TR.,DIGITAL RT1N241S |
| U138 | 5232252520 | TR.,DIGITAL RT1N241S |
| U139 | 5232252620 | TR.,DIGITAL RT1P241S |
| U140 | 5232252620 | TR.,DIGITAL RT1P241S |
| U171 | 5232252520 | TR.,DIGITAL RT1N241S |
| U172 | 5232252520 | TR.,DIGITAL RT1N241S |
| U173 | 5232252520 | TR.,DIGITAL RT1N241S |
| U174 | 5220017200 | IC.,HD14069UBP, |

VR PCB ASSY

| REF.NO. | PART NO. | DESCRIPTION |
|---|---|---|
| | *5200218900 | VR PCB ASSY |
| | *5210218900 | VR PCB |
| | *5800824600 | PLATE, VR |
| | *5800933000 | GEAR ASSY, |
| | *5800933100 | PLATE, GEAR |
| | *5800933200 | GEAR |
| | *5800933300 | FELT |
| | *5785153700 | WASHER, WAVE BWW-608 |
| | *5800933400 | WASHER |
| | *5786109000 | RING, CS |
| | *5782013004 | BOLT, HEXAGON M3X4 |
| | *5800933500 | GEAR B |
| | *5800933600 | BELT,TIMING |
| R102 | 5282411600 | VR.,10KAX2 1S2UVR 16 |
| R103 R203 | 5282016000 | VR.,10KA 1S1UVR 16 |
| R201 | 5280020900 | VR., SEMI-FIXED 2.2KB |
| U101 U201 | 5286000200 | COIL,TRAP 100KHZ |

Parts marked with * require longer delivery time.

METER PCB ASSY

| REF.NO. | PART NO. | DESCRIPTION |
|---|---|---|
| | *5200218300 | METER PCB ASSY |
| | *5210218300 | METER PCB |
| | *5800385100 | SPACER, LED |
| | *5800824500 | PLATE, METER |
| | *5783603008 | SCREW, BIND M3X8 |
| | *5788101800 | TUBE,UL AWG-18 |
| D101 D102 | 5224015400 | DIODE,1K60 |
| D103 D104 | 5224015020 | DIODE,1SS133T-77 |
| D105 D205 | 5225006900 | LED,PR3432S RED |
| D201 D202 | 5224015400 | DIODE,1K60 |
| D203 D204 | 5224015020 | DIODE,1SS133T-77 |
| M101 M201 | 5296006101 | METER,VU |
| Q101 Q201 | 5230780920 | SI.TR.2SC2603F 0.3 200 |
| R114 R214 | 5240025220 | R.,CARBON 56 OHM J FT |
| R115 R215 | 5240029820 | R.,CARBON 4.7K R-10 T |
| U101 U201 | 5220418800 | IC,M5218P |
| U102 U202 | 5232252520 | TR.,DIGITAL RT1N241S |

MONITOR SW PCB ASSY

| REF.NO. | PART NO. | DESCRIPTION |
|---|---|---|
| | *5200218500 | MONITOR SW PCB ASSY |
| | *5210218500 | MONITOR SW PCB |
| D101-D103 | 5225016500 | LED,PR5551K |
| J101 | 5336115600 | CONNECTOR, SOCKET |
| J102 | 5336116100 | CONNECTOR, SOCKET |
| J103-J105 | 5122373000 | CON.,SOCKET 3024-2AH |
| P101 | 5336128500 | CON.,PLUG WHT |
| S101 | 5300043400 | SW.,PUSH 8 GANG |

H.PHONE PCB ASSY

| REF.NO. | PART NO. | DESCRIPTION |
|---|---|---|
| | *5200218400 | H.PHONE PCB ASSY |
| | *5210218400 | H.PHONE PCB |
| J001 | 5330012600 | JACK,3P FJ332DB-M |
| J101J201 | 5330012600 | JACK,3P FJ332DB-M |
| R001 | 5282411500 | VR.,10KAX2 1S2UVR 9 |
| U101U201 | 6048649000 | IC,NJM386D |

BAL AMP PCB ASSY

| REF.NO. | PART NO. | DESCRIPTION |
|---|---|---|
| | *5200218800 | BAL AMP PCB ASSY |
| | *5210218800 | BAL AMP PCB |
| | 5300909200 | SW.,SLIDE 2-2 |
| J102 | 5336277800 | CONNECTOR, SOCKET |
| P101 | 5336128300 | PLUG, CONNECTOR WHT |
| P201 | 5336139300 | PLUG, CONNECTOR RED |
| U101 | 5220419600 | IC,NJM5532D |

POWER SW PCBASSY

| REF.NO. | PART NO. | DESCRIPTION |
|---|---|---|
| | *5200218700 | POWER SW PCB ASSY [J, US, C, GE] |
| | *5200218710 | POWER SW PCB ASSY [E, UK, A] |
| | *5210218700 | POWER SW PCB |
| | *5730007500 | COVER, CAPACITOR [E, UK, A] |
| P001 | 5327007200 | WRAPPING, TERMINAL [E, UK, A] |
| S001 | ⚠5300046200 | SW.,PUSH 1-1 SDDLD1 |
| Z001 | ⚠5267703800 | SPARK-KILLER,4700PF 400V |

**Parts marked with * require longer delivery time.**

[US]:U.S.A. [E]:EUROPE [UK]:U.K. [C]:CANADA [A]:AUSTRALIA [GE]:GENERAL EXPORT [J]:JAPAN

# 9. IC INTERNAL BLOCK DIAGRAMS

## ICブロック・ダイヤグラム

BA843

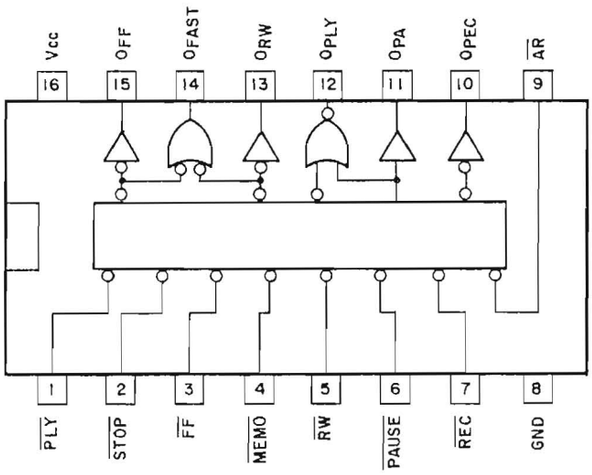


RMNZ8178

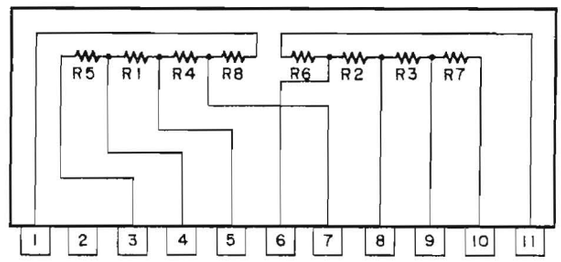


TC4011BP

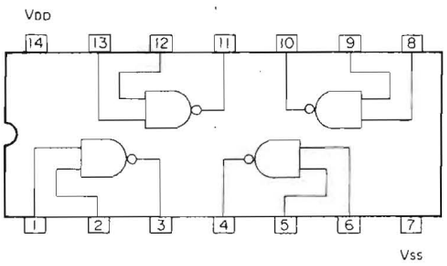


TC4001BP

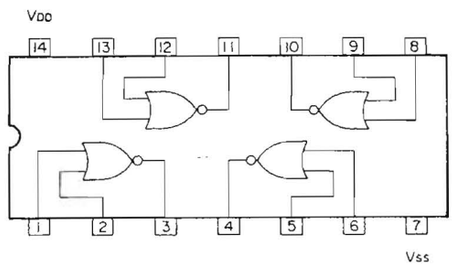


TC4030BP

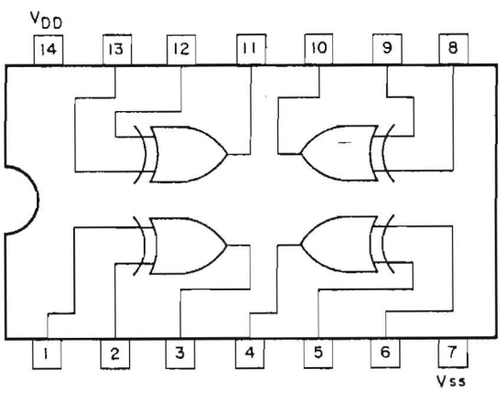


LC4066B

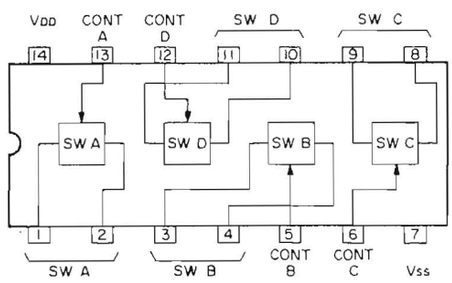

HD4069BP

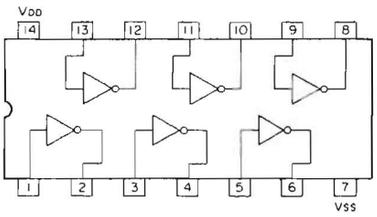


HD14069BP

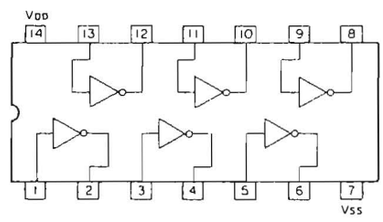


NJM4560
NJM4562DD

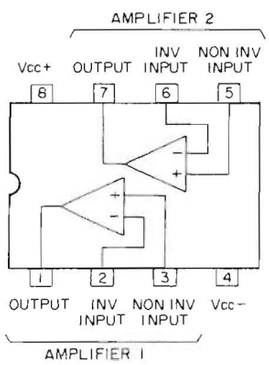


NJM5532S

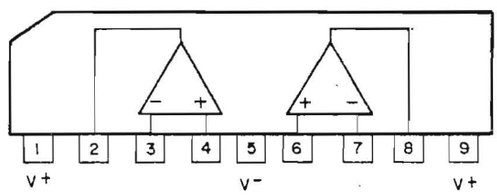


M5218P

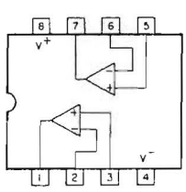


μPC1297CA

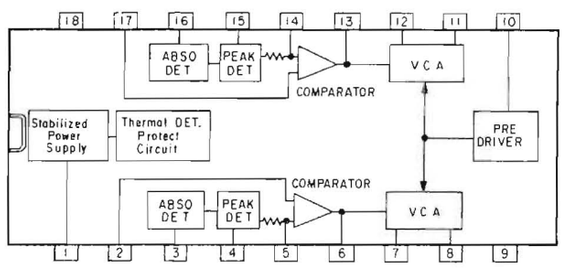


RT1N241S

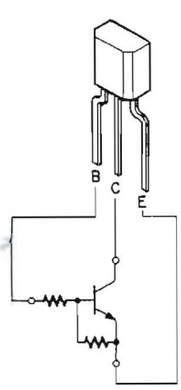


RT1P241S
2SA1527

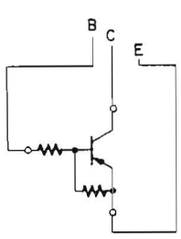


CX20187

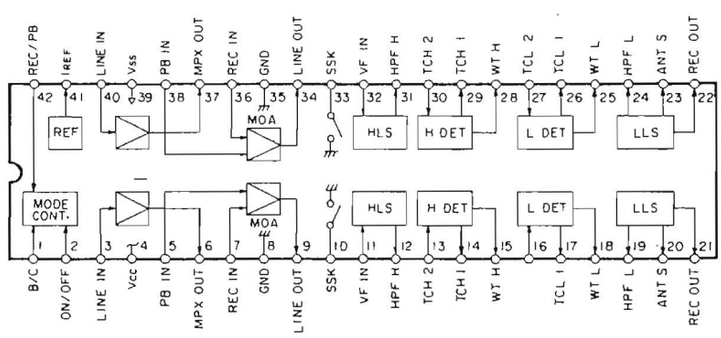

# 122MKII Master Cassette Deck

# TASCAM
## TEAC Professional Division


**ティアック株式会社** 営業部 181 東京都三鷹市下連雀4－15－30 電話 (0422)45-7731(代)

カタログの請求，製品およびサービスに関するお問合わせは，最寄りの営業所等へご連絡ください。

| | | | | |
|---|---|---|---|---|
| 札幌営業所 | 064 | 札幌市中央区南7条西2－2 | くぼたビル | 電話 (011)521-4101(代) |
| 仙台営業所 | 980 | 仙台市1番町2－5－5 | 中央ビル | 電話 (022)227-1501(代) |
| 東京営業所 | 100 | 東京都千代田区永田町2－10－7 | 星ガ岡会館 | 電話 (03) 592-1831(代) |
| 三鷹出張所 | 181 | 東京都三鷹市下連雀4－15－30 | | 電話 (0422)45-7721(代) |
| 千葉出張所 | 280 | 千葉市松波1－11－3 | 石橋松波ビル | 電話 (0472)55-1281(代) |
| 横浜営業所 | 221 | 横浜市神奈川区沢渡1－1 | 高島台第一ビル | 電話 (045)312-3270(代) |
| 名古屋営業所 | 464 | 名古屋市千種区東山通り3－2－3 | | 電話 (052)782-4581(代) |
| 静岡出張所 | 420 | 静岡市中島大割2861－1 | | 電話 (0542)81-6561(代) |
| 大阪営業所 | 564 | 大阪府吹田市垂水町3－34－10 | | 電話 (06) 384-5201(代) |
| 京都出張所 | 600 | 京都市下京区大宮通四条下ル四条大宮町21 | 新三虎ビル | 電話 (075)842-0751(代) |
| 岡山出張所 | 700 | 岡山市新保1142－6 | | 電話 (0862)25-8601(代) |
| 広島営業所 | 733 | 広島市中区西川口町13－19 | | 電話 (082)294-4751(代) |
| 福岡営業所 | 812 | 福岡市博多区東光2－2－24 | | 電話 (092)431-5781(代) |
| 松本サービスセンター | 390-03 | 塩尻市広丘吉田1007－7 | | 電話 (0263)58-6849(代) |
| 新潟サービスセンター | 950 | 新潟市東明7－4－1 | | 電話 (0252)86-7640(代) |
| 大宮サービスセンター | 330 | 大宮市三橋2－－846 | | 電話 (0486)42-4551(代) |
| 沖縄サービスセンター | 901-22 | 沖縄県宜野湾市字喜友名229 | | 電話 (09889)2-2020(代) |
| サービス1課 | 190-12 | 東京都武蔵村山市伊奈平2－11－1 | | 電話 (0425)60-8918(代) |
| 技術的なお問合わせ　AV技術相談室 | 190-12 | 東京都武蔵村山市伊奈平2－11－1 | | 電話 (0425)60-7761(代) |

| | |
|---|---|
| TEAC CORPORATION | MAIN OFFICE: 3-7-3 NAKACHO MUSASHINO TOKYO PHONE (0422) 53-1111<br>SALES OFFICE: 4-15-30 SHIMORENJAKU MITAKA TOKYO PHONE (0422) 45-7741 |
| TEAC CORPORATION OF AMERICA | 7733 TELEGRAPH ROAD MONTEBELLO CALIFORNIA 90640 PHONE (213) 726-0303 |
| TEAC CANADA LTD. | 3610 NASHUA DRIVE UNIT 1 & 2 MISSISSAUGA ONTARIO L4V 1L2 PHONE 416-673-3303 |
| TEAC AUSTRALIA PTY., LTD. | 115 WHITEMAN STREET SOUTH MELBOURNE VICTORIA 3205 PHONE 699-6000 |


PRINTED IN JAPAN 0487SK1.0·M-0013