Preprint 3014 (B-2)

Improving room acoustics through time-variant synthetic reverberation

David Griesinger
Lexicon, Waltham, MA, USA

Presented at the 90th Convention 1991 February 19-22 Paris

AES

This preprint has been reproduced from the author's advance manuscript, without editing, corrections or consideration by the Review Board. The AES takes no responsibility for the contents.

Additional preprints may be obtainded by sending request and remittance to the Autdio Engineering Society, 60 East 42nd Street, New York, New York 10165, USA.

All rights reserved. Reproduction of this preprint, or any portion thereof, is not permitted without direct permission from the Journal of the Audio Engineering Society.

AN AUDIO ENGINEERING SOCIETY PREPRINT

David Griesinger
Lexicon
100 Beaver Street
Waltham, MA 02154
11/5/90

Improving Room Acoustics through Time-Variant Synthetic Reverberation

Abstract:

This paper presents a practical method of predicting the stability and effectiveness of any electroacoustic reverberation system. It uses the method to explain a new digital system which uses completely time variant reverberators. The unique system design produces high reverberant level while allowing the pickup microphones to be as much as 50 feet from sound sources without coloration from acoustic feedback.

Introduction

This project started when we were asked to help improve the acoustics of the Elgin Theater in Toronto without changing the appearance of the theater in any way. The author was asked by Robert Tanner and Neil Muncy to design an electroacoustic system which would achieve the goal. In this paper we present the design analysis which led to the successful electroacoustic system in the Elgin. The photo shows the system after installation. Approximately 26 of the 116 loudspeakers are included in the portion of the ceiling visible in the photo. The two microphones are on the balcony edge. We have also installed an experimental version of this system with four microphones and 24 loudspeakers in a 450 seat theater in Concord Mass. with excellent results.

Many rooms and halls intended for musical performances suffer from inadequate reverberation time or level, insufficient lateral energy, excessive initial time delay, or other acoustical problems. Electroacoustic systems devised to help with these problems, such as Closely Miked Systems (CMS), Assisted Resonance (AR), Multi Channel Reverberation (MCR), and more recently Acoustic Control Systems (ACS), all share various difficulties, including complex system design, high expense, marginal stability, and sound coloration. We developed some simple mathematical techniques for analyzing enhancement systems, and used it along with many recent advances in the field of electronic reverberation to design a system of our own. The new system (patent pending) uses two or more microphones 25 to 50 feet from the sound source, a large array of loudspeakers arranged in four or more interleaved banks, and digital electronics with 16 (or at least eight) independent time variant reverberators. The time-energy curve of the reverberators has been tailored to provide relatively high RT20 vs RT60, high diffusion, freedom from echo, non critical speaker placement, and high intelligibility. A system with two input channels, eight output channels, and 16 reverberators has similar stability as an MCR system with 64 channels. When the microphones can be placed within 40 feet of the stage the system offers high stability and independent control over reverb time and reverb level.

Prior Work:

All broad band acoustic enhancement systems seek to overcome the basic problems of speaker placement, microphone placement, and acoustic feedback. In nearly all the systems that we have studied the coloration induced by acoustic feedback is the limiting factor in the design. Acoustic feedback is influenced by all the other parameters in the system, and will ultimately determine how much reverberant level the system will be able to produce.

Fortunately the problem of feedback in rooms has been extensively studied mathematically, and we can develop some simple tools for analyzing it.

Coloration due to feedback can be reduced by:

1. Moving the microphones closer to the source
2. Reducing the system level by reducing the system gain
3. Increasing the number of independent channels
4. Adding some form of time variance.

We can examine acoustic feedback mathematically. First consider a system composed of a single microphone and loudspeaker.

Average Loop Gain

We can quantify the amount of acoustic feedback by defining the "average loop gain" which is the total energy picked up by the microphone from the loudspeaker, divided by the total energy picked up by the microphone from the source. Figure 1

Av Loop Gain = [Av mike output from speaker/Av mike output from source]

In a broadband system the loop gain is an average over many frequencies. The transfer function between the speaker and the microphone has many peaks and valleys as a function of frequency due to interference between the many reflections in the sound path. The loop gain at some frequencies is much higher than the average. As gain in the system is increased the system rings at the frequency of the highest peak. If we assume the microphone and the loudspeaker are separated by at least the critical distance of the room, the average loop gain where ringing begins has been predicted by Schroeder (here the drawing has been taken from a paper by Soresdal.) See figure 2. The maximum gain depends on the reverb time of the room and the bandwidth of the system, and is always much less than unity. For a broadband system and a reverb time of two seconds the maximum loop gain is about -12dB. In addition to avoid obvious coloration in a broadband system the loop gain should be at least 8dB less than the gain at which ringing begins (see Krokstad). This means that for a high quality reinforcement or acoustic enhancement system the average loop gain must be -20dB or less! The mathematics of this problem is identical to the math encountered in sound reinforcement, and this figure may be familiar to many of you.

Systems with very close microphones, (CMS)

Sound reinforcement systems meet this requirement by placing the microphone very close to the source. When the pickup microphone is close to the source useful acoustic energy can be generated at a low value of loop gain. We can make an acoustic enhancement system out of a conventional reinforcement system by placing an artificial reverberator in the system path, and using a distributed loudspeaker array. Success depends partly on the loudspeaker placement and the quality of the reverberator, but it depends mostly on how close the microphone can be placed to the source of sound. Designing a system of this type is really a problem in mike placement, as is frequently the case in sound reinforcement.

Critical Distance and Enhancement Critical Distance

We can predict how close we need to place our microphone through the concept of critical distance. In classical acoustics the critical distance of a hall is the distance from an omnidirectional sound source to a point where the total reverberant energy and the direct energy are equal. The critical distance is really a measure of the reverberant level in the

hall. When we add an enhancement system we will increase the reverberant energy in the room and lower the critical distance. Lets define the enhancement critical distance (ECD) as the distance where the direct sound from a source and the acoustic feedback from a loudspeaker system have equal energy. See figure 3, 4. With an omnidirectional microphone the average loop gain is then simply the source to microphone distance divided by the enhancement critical distance.

Av Loop Gain (omni mike) = (source distance/enh. critical distance)

If the enhancement critical distance is smaller than the natural critical distance most of the reverberant energy comes from the system. If the enhancement distance is larger than the natural distance a dual slope decay will usually result. In either case it is the enhancement critical distance which will determine stability. Figure 4.

To calculate stability we simply keep track of the loop gain, which is the same as the ratio of the source to microphone distance and the enhancement critical distance. For a single channel system with one omnidirectional microphone if we want the loop gain less than -20dB for high quality:

Figure 5

(1) (source distance/enh. critical distance) <= 1/10

Many good halls have a natural critical distance of about 7 meters. If we want the enhancement critical distance to be about 7 meters, an omni microphone must be within 70cm of the source.

Cardioid Microphones

If the feedback energy from the system is the same in all directions a cardioid microphone pointed at the sound source is 3 times more sensitive to direct energy for a given amount of feedback, so it can be a factor of sqrt(3) further away from the source. (A hypercardioid gives a factor of two in distance.) Figure 6

For a cardioid microphone:

(2) (source distance/enh. critical distance) <= .173

For an ECD of 7 meters we need to be within 1.2 meters of the source, a distance which is probably familiar to anyone who has worked with sound reinforcement. With care we can mike a single stationary source, say a solo violin or a singer. What do we do with an orchestra?

Microphone Mixing Increases Feedback

Lets attempt to mike an orchestra with an array of 12 cardioid microphones, hung about 2 meters above the floor. The signals are all mixed together to mono before being sent to the reverberator. Unfortunately each microphone picks up feedback from the hall. To determine the stability of the system we must consider the source of sound as being picked up on only one microphone, and the hall by all of them. If the microphones are far enough apart that the feedback is uncorrelated we can find the total hall pickup by adding the energy from each microphone. (Any correlation makes matters worse.) Thus two microphones mixed have 3dB more hall than just one, and the gain before feedback is 3dB less. An array of 12 microphones will reduce the gain before feedback by the sqrt(12), or about 11dB. This is equivalent to a factor of 3.5 in distance. Figure 7

With a single channel system and mixed cardioid microphones.

(3) (source distance/enh. critical distance) <= .173/(sqrt(#microphones))

To maintain -20dB loop gain each cardioid mike in a 12 microphone array needs to be within about 30cm of each source. This is exceedingly difficult, as any sound engineer knows.

In spite of these difficulties single channel acoustic enhancement systems of this type have been built. (ref. Figwer) In general they achieve stability by running with very low acoustic output level, and correspondingly large ECDs. In other words, you can't hear them while the music is playing.

Lets summarize: Single channel enhancement systems are exceedingly difficult to mike, and the microphone array is likely to be obtrusive. For broad sources such systems are likely to provide little or no increase in level or lateral energy during symphonic music, although a pleasant effect can be made during gaps in the sound.

Multi Channel Reverberation (MCR)

We can also reduce acoustic feedback by increasing the number of independent channels, each with a separate microphone, amplifier, possibly a delay or reverberation unit, and loudspeaker(s). Systems of this type have been marketed for some time by Phillips. If the microphones can be placed so the individual channels are statistically independent the total acoustic power will be the sum of the powers provided by each channel.

If we require that the gain of each channel be below -20dB this means a single broadband channel without an internal reverberator can increase the reverb time of a room by about 1%. (See Krokstad)

The most important point about these systems is that the performance of the system - the reverberant level or the source to microphone distance - is proportional to the square root of the number of channels. In practice 50 to 100 channels are desirable. With such a large number of microphones it is not possible to concentrate them near the source. They are typically distributed through the hall. Figure 8

Ideally each channel of a MCR system should include a delay which is greater than or equal to the mean free path in the room. Otherwise the reverb level associated with a given reverb time will be too high - the room will act as if its volume was decreased.

Acoustic Control Systems (ACS)

Recently a system called Acoustic Control Systems or ACS has appeared which uses a large number of microphones placed near the source and a large number of loudspeakers connected to the microphones by a matrix of delays. According to a paper by Berkhout this matrix is calculated for each installation based on the delay paths and image sources which would exist in a larger ideal hall drawn around the existing hall. A problem with this procedure is that it is derived for the first wavefront from the stage, and does not take into account the feedback which occurs among the microphones and loudspeakers. As presented in Berkhout's paper the system is not designed to provide maximum stability. Adding time variation to the matrix connections as suggested in the paper will help, but The ACS system is quite complex to design and expensive to construct. The author has not heard any of the existing systems, but others have described them as successful. Figure 9

RODS

The RODS system was developed by Peter Barnet of Acoustic Management Systems, and has been used in several installations by Jaffe Acoustics. As I understand it, this is a non-linear system, where automatic gates are used to connect the microphone to the input of a delay line only when the acoustic level is rising or constant, and to connect the output of the delay line to the speakers when the level is falling. Thus acoustic feedback is eliminated. The idea is clever, and may be useful in situations where it is not desired to enhance the level of continuous music. The RODS system by design does not contribute to lateral energy or sound level during continuous orchestral music, although it is capable of increasing the apparent reverb time. Figure 10

Description of the new system

The new system is based on time variant reverberators, which have been developed by the author over many years as a tool for the recording industry.

As you can see from the block diagram (figure 12) the system depends on a small number of microphones located as close as is conveniently possible to the source, at least 4 speaker banks, and a large number of independent time varying reverberators, which form the connections between the microphones and the speaker banks. In the example shown, there are 2 microphones and 8 speaker banks. There are 2*8=16 possible connection paths between each microphone and each loudspeaker, and each one of these connections is made with a reverberator.

The time varying reverberators have some unique properties, as you can see from figure 12. The top impulse response was made about one minute earlier than the bottom one. As you can see, the patterns are completely different. The transfer functions also have a relatively flat time-energy curve for the first few hundred milliseconds.

From previous experiences with hall simulation it was known that we need not synthesize a particular pattern or reflections. The reverberators can all be identical in design as long as at any time the correlation between them is zero. The time variation must be sufficiently fast that the autocorrelation of any reverberator with itself is also zero after a delay of about 1 second.

From the standpoint of stability the time varying reverberators serve two functions:

1. They randomize the microphone signals - allowing a single microphone to behave from the standpoint of stability as if it were a number of independent microphones. We can therefore mix the microphone signals together AFTER the reverberators without paying the penalty in stability we saw in the CMS system. The system behaves from a standpoint of stability as if it had a number of channels equal to the number of reverberators, which is ideally the product of the number of microphones and the number of speaker banks. This product is exceedingly important. Microphones are expensive and unsightly. By using a small number of them and a large number of relatively inexpensive electronic reverberators the system can be made much more practical.

2. Time varying reverberators directly add at least 6dB of extra stability to the system through their ability to broaden resonant peaks in the room transfer functions. With the very high degree of decorrelation provided by our reverberators the actual improvement is slightly better than that. The average loop gain in each channel can be as high as -12dB, which is an improvement of 8dB over a typical non time variant system. These numbers come from a series of laboratory experiments.

If we use cardioid microphones we find: Figure 13

(4) 20*log(source distance/enh. critical distance) <=
-12dB(stability) +4.8dB(cardioid mike) +10*log(#of reverberators)

For a system with cardioid microphones this simplifies to:

(5) (source distance/enh. critical distance) <= sqrt(#reverberators)/2.3

We can generalize this equation somewhat by allowing the possibility that microphones would have to be mixed before passing through a reverberator. In this case:

(6) (source distance/enh. critical distance) <=

sqrt[#reverberators/#microphones per input channel]/2.3

This equation can be used as a general guide for designing systems of this type, as it allows you to calculate how many reverberators you need once you know how close to the sound source you are able to place your microphones.

This system gives an enormous improvement over a conventional single channel system. For the Elgin, where we use 8 speaker banks, 2 microphones, and 16 reverberators:

(7) (source distance/enh. critical distance) <= 1.75

This is an amazing amount of source-microphone distance, and the calculation is quite conservative. We have assumed a full 15kHz bandwidth and a 1.5 to 2 second reverb time in deriving the equations. The system as installed works better than this, but for design purposes we should not recommend exceeding a source distance of two times the critical distance.

If we compare (3) to (7) we can see that using multiple reverberators and no microphone mixing yields an improvement of a factor of 35 in source distance over a single channel system with 12 microphones!

Problems with time variation

Time delay in a digital system is quantized in units of the inverse sample rate, so interpolation must be performed on each moving delay or the output will be unacceptably full of noise and clicks. In addition there is a pitch shift associated with any delay change. Given randomly changing delays there is a finite probability they will all decide to shift in the same direction at once, and a beautiful decay will go flat or sharp. We have developed a special algorithm for delay change which minimizes the pitch shift, but in a single channel the margin is still small between freedom from color and audible pitch problems with piano or clarinet.

Although the reverberators used in this system are similar in some ways to the time varying reverberator standard in the Lexicon 480l, the new reverberators give at least a 3dB improvemnt in gain before feedback when compared to the standard ones. The energy time curve has also been optomized for maximum blend between the loudspeakers and minimum discrete echo. We are continuing to work on the software, and hope to additionally improve the coloration, particularly when there is substantial acoustic feedback.

The Elgin installation

The Elgin Theater seats 1500 people, with a volume of about 270,000ft^3 excluding the under balcony area, and 320,000ft^3 including it. The low ceiling contributes both to the high intelligibility in the hall and to the short reverb time. There is a large balcony covering 2/3's of the floor seats. The ceiling height below the balcony is low, in some places as low as 11 feet. Reverb time above the balcony is around 1 second at mid frequencies with the hall empty, rising to about 2.5 seconds at 100Hz. Below the balcony reverberation as such is nearly non existent.

Figures 14, 15, 16

Our job was to supply increased lateral energy, preferably while the music was running, and to increase the reverberant level and reverb time, particularly under the balcony. The system had to be invisible to the eye and free of any electronic coloration. We decided to use about 120 loudspeakers of very high quality recessed into the two ceilings. (Paridgm 3sc) The loudspeakers, chosen with the help of the National Research Council of Canada, are exceptionally free of color. Bass response extends to about 60Hz. Figure 17, 18

The number of microphones and speaker banks used in the Elgin theater was primarily determined by the hardware of the reverberators. Using two Lexicon 480 processors gives us 8 output channels, allows internal mixing from two input channels, and runs 16 reverberators. The 480s supply all the time delays, so no additional digital electronics are needed. The 480s are controlled remotely by a single Lexicon MRC midi controller.

The 8 outputs are directed to 8 banks of loudspeakers, which are arranged in an interleaved pattern we call a tiling. No two adjacent loudspeakers are driven from the same output. This lack of coherence between the loudspeakers increases the apparent diffusion of the system and reduces coloration. A tiling of this type requires at least 4 output channels, and this number is the minimum we recommend for this type of installation. Figure 19

We were concerned at first that we would need speakers on the side walls. However we correctly decided that dense ceiling arrays would form image sources well beyond the wall, and lateral energy would be adequate.

Control of reverb level and Music/speech detection

The microphones are close enough to the stage that we can achieve independent control over reverb time and reverb level. Experiments on the system in Toronto have allowed us to determine that the optimum reverb level for speech is about 6dB lower than the optimum for symphonic music. Opera requires intermediate values, with dialog being close to speech, unaccompanied singing requiring about 2dB more, and accompanied singing about 2dB more than that. We are currently working on a detector which would allow the system to automatically adjust the reverb level to match the type of music being performed.

Microphones and Electronics

In the Elgin two B&K cardioid microphones are currently on short booms attached to the balcony rail. They are about 15 meters from the stage. In this position they are invisible to the audience, and pick up the pit orchestra and the stage with good uniformity. They are also able to pick up the main sound reinforcement loudspeakers with about the same efficiency as the audience, which means the reverb balance with and without reinforcement is about the same. Clapping your hands anywhere on the floor (except under the balcony) gives a quite satisfactory reverberant decay. It is not practical to get the microphones closer to the stage at this time.

Costs

The Elgin project has cost under $200,000 in equipment and installation. A major part of this expense was the installation of the loudspeakers, which were very successfully hidden from view. The care we took to hide both the speakers and microphones is an important part of the success of the system with critics and the public.

Results and Conclusion

The prototype system in the Elgin theater in Toronto has performed beyond our expectations, particularly with regard to the distance from the stage of the microphones. Figure 20. Reviews of the first musical show all praised the acoustics of the theater. The Toronto Opera will use the Elgin for part of their next season, and the organizers are particularly pleased with the acoustics.

Below the balcony the improvement in sound quality is dramatic. The uniform array of loudspeakers produces equal energy distribution in all directions, and sound all around a listener. You can stand directly under one of the 53 under balcony speakers and not hear it specifically, even though it is only about 5 feet above your head. Without the system the sound in these seats is lifeless and too low in level. With the system running the ceiling disappears, the level increases, and the listener is surrounded by the hall. The lateral sound energy here goes from low to high.

Above the balcony the change is less dramatic but worthwhile. The acoustic quality of the theater in this area is already pleasant for speech and light music. The system adds some warmth without being in any way obtrusive. It is capable of realistically reproducing reverb times appropriate to orchestral music should the need arise. Longer reverb times or higher reverb levels can be adjusted at any time with the sliders on the midi controller.

In spite of what seems a total success, in the author's opinion the system is operating on the margin of acceptable performance. When we first tested the system we were able to mount the microphones on stands at the edge of the balcony, some 10 feet above the under balcony ceiling. Microphones in this position were essentially insensitive to the under balcony speaker array. When the microphones were finally permanently mounted they had to go on the edge of the balcony, in a position where they were substantially into the sound field from both the above and below balcony systems. In addition the lighting designers grabbed the entire center area of the balcony edge for motorized lighting, which forced the microphones to move far to the sides. (Acoustics always seem to take a second place to visuals, alas.) In this position the system is operating with about 3dB less gain before feedback than we had hoped for, and when the system is set for full reverb level there can be some noticeable coloration on spoken voice. The current microphones are at least 15 meters from the sound sources, and the design goal was for an enhancement critical distance of 7 meters or less. With a maximum predicted source distance to critical distance ratio of 1.75 the system is operating well outside its intended design range. This is not a problem in practice, since symphonic music seldom includes spoken voice, and no one operating a show wants to use the maximum reverb level. If we could hang the microphones, or move a few lights, the author would be delighted with the system. In its current state the system is very good, but it is not Boston Symphony Hall. Our analysis predicts that if an orchestra shell is added, thus increasing the reflectivity of the stage, or if the same function is achieved by adding additional speaker banks to the stage area, more reverberators and output channels will have to be added to maintain adequate performance. If the hall were to be dedicated to symphonic music hanging the pickup microphones would be acceptable, and the results with the current electronics would be glorious. Any stereo microphone technique suitable for a radio broadcast could be used as a pick up for the acoustic system, and would yield at least a 6dB improvement in stability over the present miking.

Conclusions

This type of system can be recommended for any acoustic application where there is a need to increase the level of reflected sound or increase the reverb time of a room. Since the speaker positions are not critical, speakers can be used to increase reflected energy wherever it is needed, such as in the stage area, to decrease an initial time gap which is overly long, or to increase the amount of lateral energy around the audience.

An electroacoustic system of this type is capable of giving a relatively dead auditorium satisfactory acoustics for both music and speech. It is also capable of increasing the sound level in a large hall without obvious coloration. It thus holds the promise of overcoming some of the basic problems of physical acoustics. It is both less expensive and more successful at this than solutions based on moveable curtains or other variable absorption, since it permits a large room to have the sound level of a smaller one, and a smaller room to have the reverb time of a larger one.

Our experimental system in Concord Massachusetts has demonstrated that the system can also work well in a small hall. Small halls suffer in general from two acoustic problems: a reverb time which is perceived as too short for symphonic music (especially when the audience is present) and a reverberant level which is much too high, making the hall muddy and loud. If we try to raise the reverb time by reducing the absorption we raise not only the reverb time but also the reverb level, which makes the hall even louder and harsher. With an electroacoustic system enough absorption can be added to the hall to damp the unneeded reflections, and the seats can have much more nearly optimal acoustics. In Concord there is already enough absorption for adequate acoustics with orchestra, and when the audience is present the system is quite effective. We are in the process of deciding where and how additional absorptive materials can be added to improve the clarity of sound during rehearsals, and the intelligibility when the hall is used for plays.

The problems with electroacoustic systems in the past, namely coloration due to feedback, complex design, high expense, and marginal performance are reduced by this system. It is not a panacea. For a successful installation careful attention must be paid to the coverage of the microphones and speakers, the relation between the number of channels and the source distance, and all existing acoustic problems in the structure.

References

J.J. Figwer "An Electronic System for Enhancement of Reverberation at Kresge Auditorium, M.I.T., Cambridge, Mass." Acoustical Society of America, 87th Meeting, Session N, 24 April 1974 - Paper received through the courtesy of Tom Horrall of Acentech Inc. 125 CambridgePark Drive, Cambridge, MA 02140.

A. Krokstad "Electroacoustic Means of Controlling Auditorium Acoustics" University of Trondheim report number 408507 The Norwegian Institute of Technology Division of Telecommunications O.S. Bragstads plass 4, N7034 Trondheim-nth, Norway

P.H. Parkin and K. Morgan "Assisted Resonance" in the Royal Festival Hall, London: 1965-1969" J. Acous. Soc. of Am., Vol. 48, April 1970, p1025

N.V. Franssen "Sur l'Amplification des Champs Acoustiques" Acoustica, Vol. 20 Heft 6, 1968, p 316

S.D. de Konig "The MCR system-multiple-channel amplification of reverberation" Phillips Technical Review, Vol. 41, #1, 1983/84 p 12

E.J. Voelker, C.L. Mueller and D. Kittler "Electronic Modification of the Room Acoustics in a Concert Hall" J. Audio Eng Soc Vol. 24, Sept. 1976, p 572

H. Kuttruff "Uber die Frequenzkurven electroakustisch gekoppelter Raume und ihre Bedutung fur die Kunstliche Nachhallverlangerung" Acoustica, vol 15, # 1, 1965, p 1

M. Schroeder "Die Statistischen Parameter der Frequenzkurven von Grossen Raumen" Acoustica Vol. 4, 1954, p 594

A.J. Berkhout "A Holographic Approach to Acoustic Control" J. Audio Eng. Soc. Vol. 36, #12, 1988 December p 977

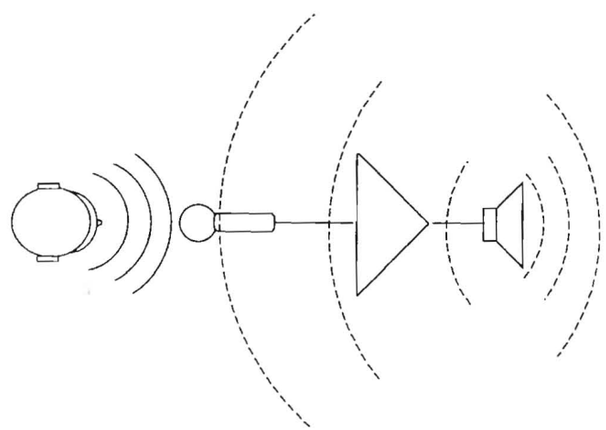

Figure 1

Average Feedback Loop Gain-

$$\frac{\text{Average Mike Output From Speaker}}{\text{Average Mike Output From Source}}$$

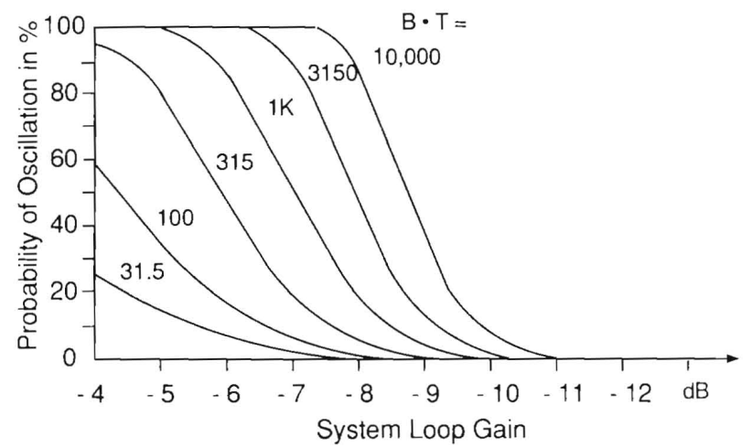

Figure 2:

Risk of uncontrolled feedback by a sound reinforcement system in a reverberant sound field as a function of system loop gain. The product of the bandwidth B and the reverberation time is a parameter. From Schroeder

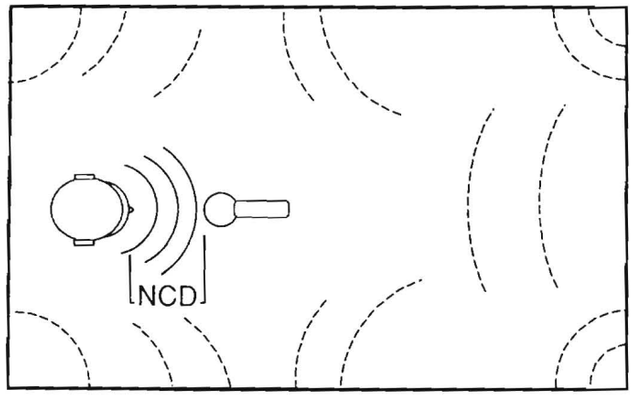

Figure 3. Natural Critical Distance
Distance from an omni-directional source where the direct and reverberant sound energy are equal.

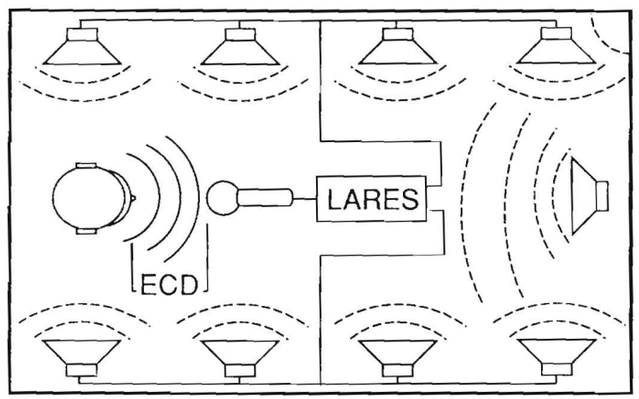

Figure 4. Enhancement Critical Distance
Distance from a source where the direct sound and the feedback sound from the enhancement system are equal.

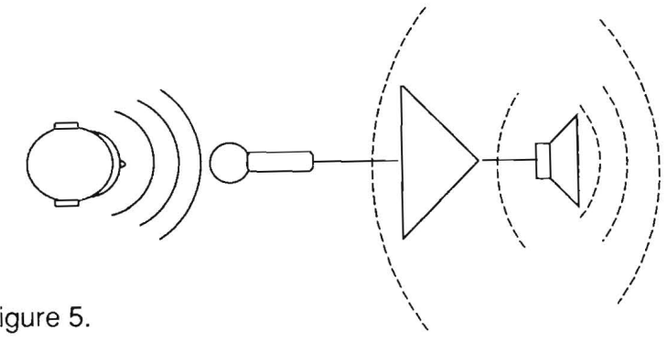

Figure 5.
For Omnidirectional:

$$\frac{\text{distance between source and microphone}}{\text{ECD}} = \frac{1}{10}$$

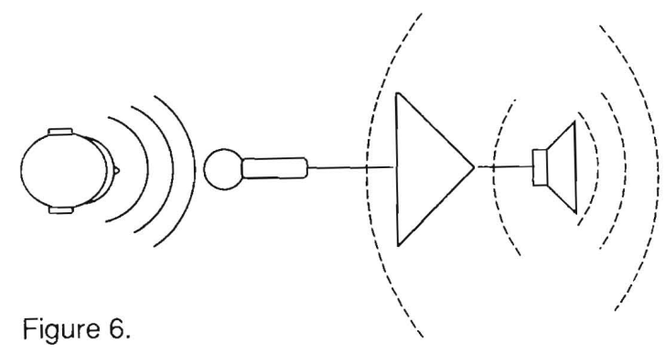

Figure 6.
For Cardioid:

$$\frac{\text{distance between source and microphone}}{\text{ECD}} = 0.173$$

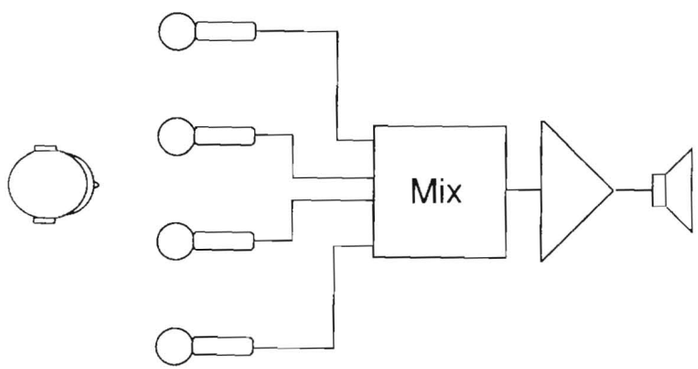

Figure 7.

Microphone mixing increases feedback:

$$\frac{\text{source distance}}{\text{enhancement critical distance}} <= \frac{0.173}{\sqrt{\text{Number of microphones}}}$$

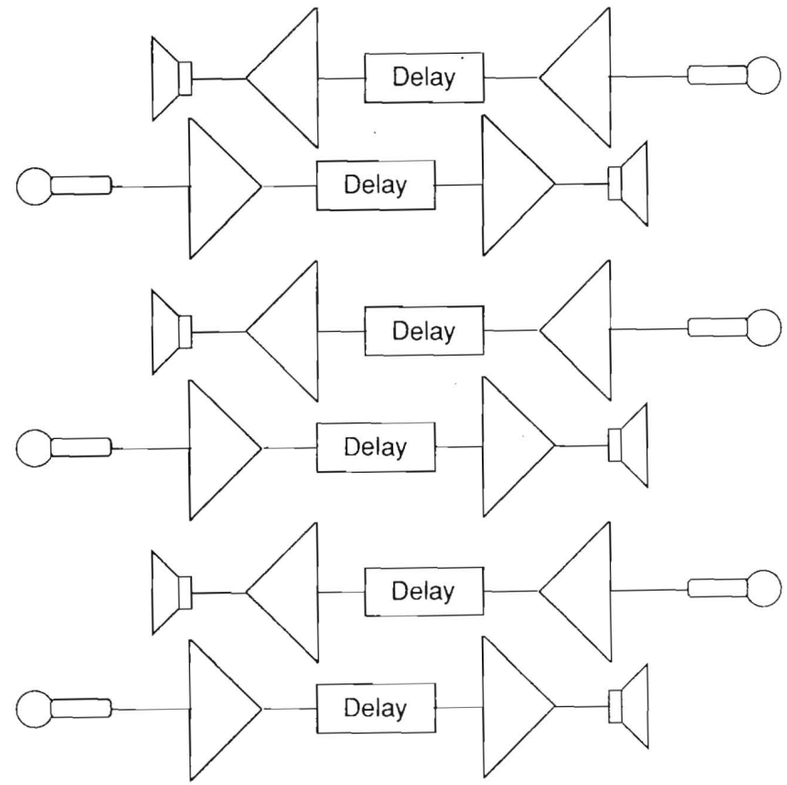

Up to 50 or More

Figure 8.

Multi Channel Reverberation (MCR). Many independent channels of microphones, amplifiers and speakers are scattered about the hall. Each can have a loop gain of -20dB or so, but together they are audible.

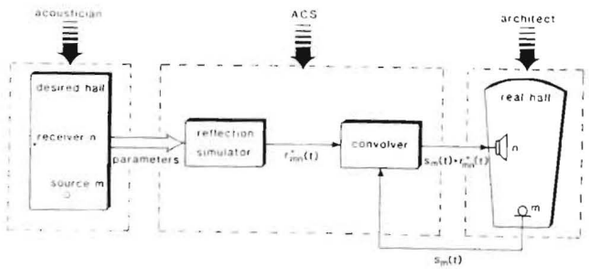

Basic system diagram for holographic reverberation control, illustrated for one microphone-loudspeaker pair. Reverberation module of ACS is based on this diagram.

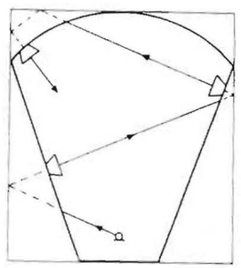

In ACS, acoustically desired hall is generally chosen around real hall.

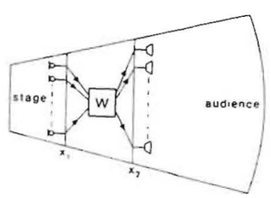

Holographic direct sound control consists of three steps: acquisition by microphone array (near stage), extrapolation by signal processor, and reconstruction by loudspeaker array (near audience).

Figure 9 Acoustic Control Systems (ACS) Outputs from an array of microphones near the stage are convolved with simulated reflections derived from an ideal hall drawn around the actual hall. If feedback can be ignored the ideal acoustics are then re-created in the actual hall. - From Berkhout

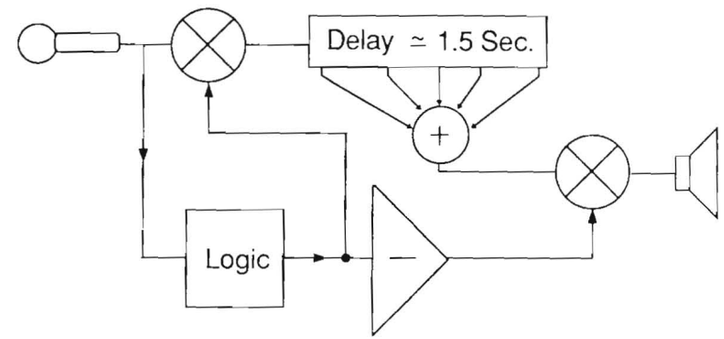

Figure 10.
RODS: Microphone signal passes through a gate before going to a tapped delay line, and the output of the line goes through a similar gate. The logic opens the input gate and closes the output gate when the mike signal is steady or rising. It closes the input gate and opens the output gate when the level falls. This system does not increase lateral energy during continuous music.

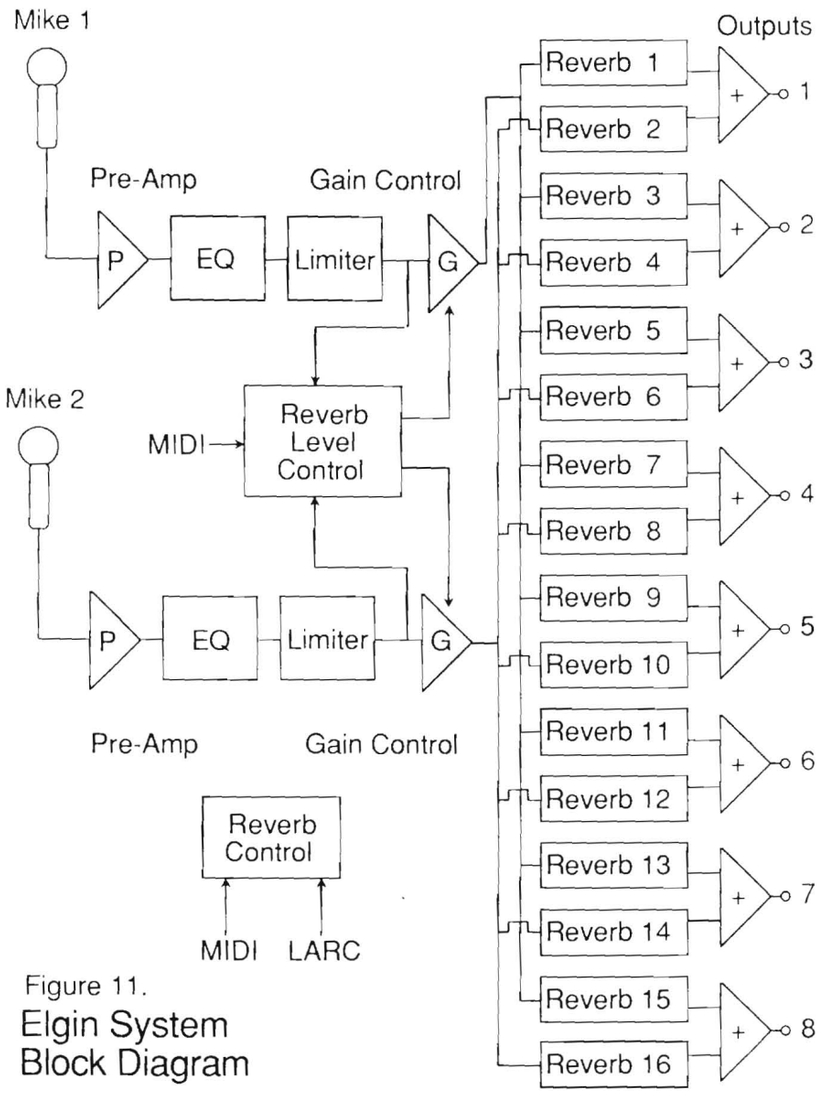

Figure 11.
Elgin System
Block Diagram

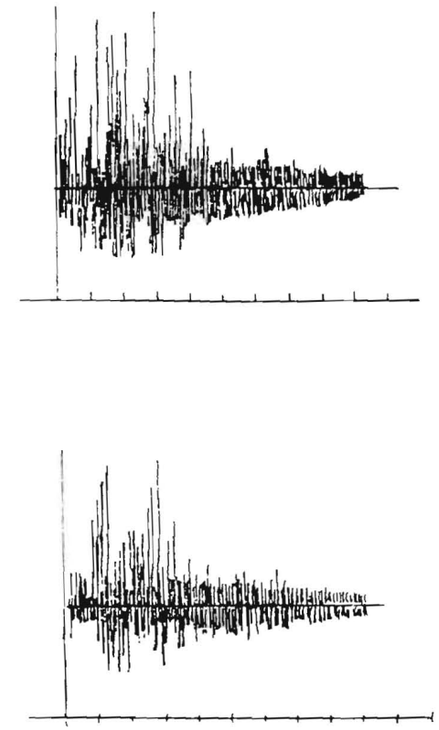

Figure12. Output of a single time varying reverberator to a positive impulse. 50ms per division. The top graph and the bottom graph were made about 1 minute apart. Notice the impulse response has completely changed.

Figure 13.

Analysis of stability for the Elgin system

$$20 \cdot \text{Log} \frac{\text{source distance}}{\text{enhancement critical distance}} <= \begin{array}{c} -12\text{dB (stability)} \\ -6\text{dB (safety)} \\ +6\text{dB (time variance)} \\ +4.8\text{ dB (cardioid microphone)} \\ +10 \cdot \text{Log (\# reverberators)} \end{array}$$

$$\frac{\text{source distance.}}{\text{enhancement critical distance}} <= \frac{\sqrt{\text{number of reverberators}}}{2.3}$$

For Elgin system with 16 reverberators:

$$\frac{\text{source distance}}{\text{enhancement critical distance}} <= 1.75$$

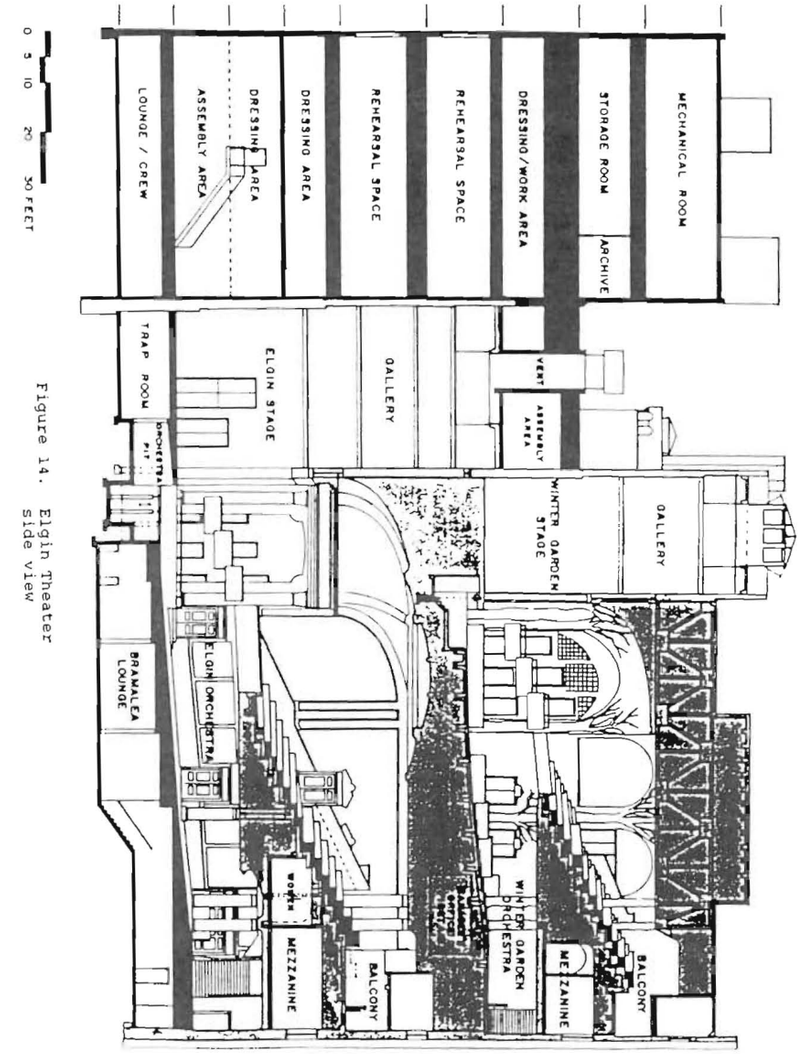

Figure 14. Elgin Theater side view

Figure 15. Elgin Theater ground floor

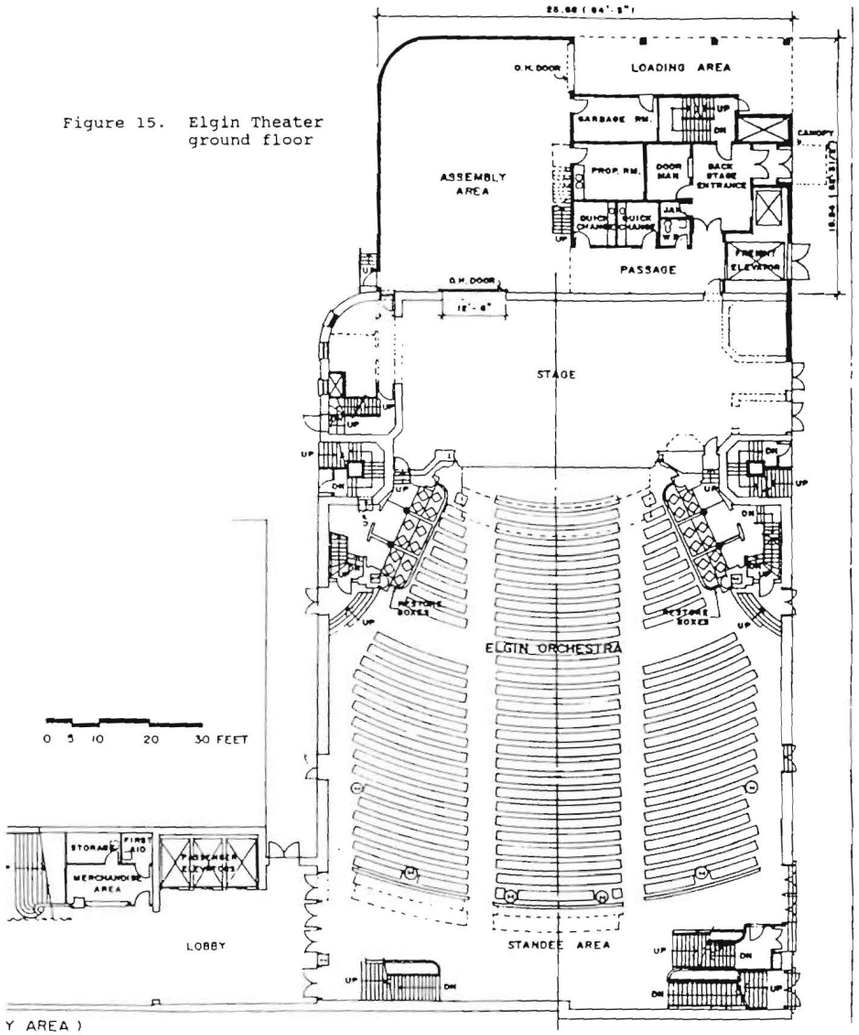

Figure 16. Elgin Theater Balcony

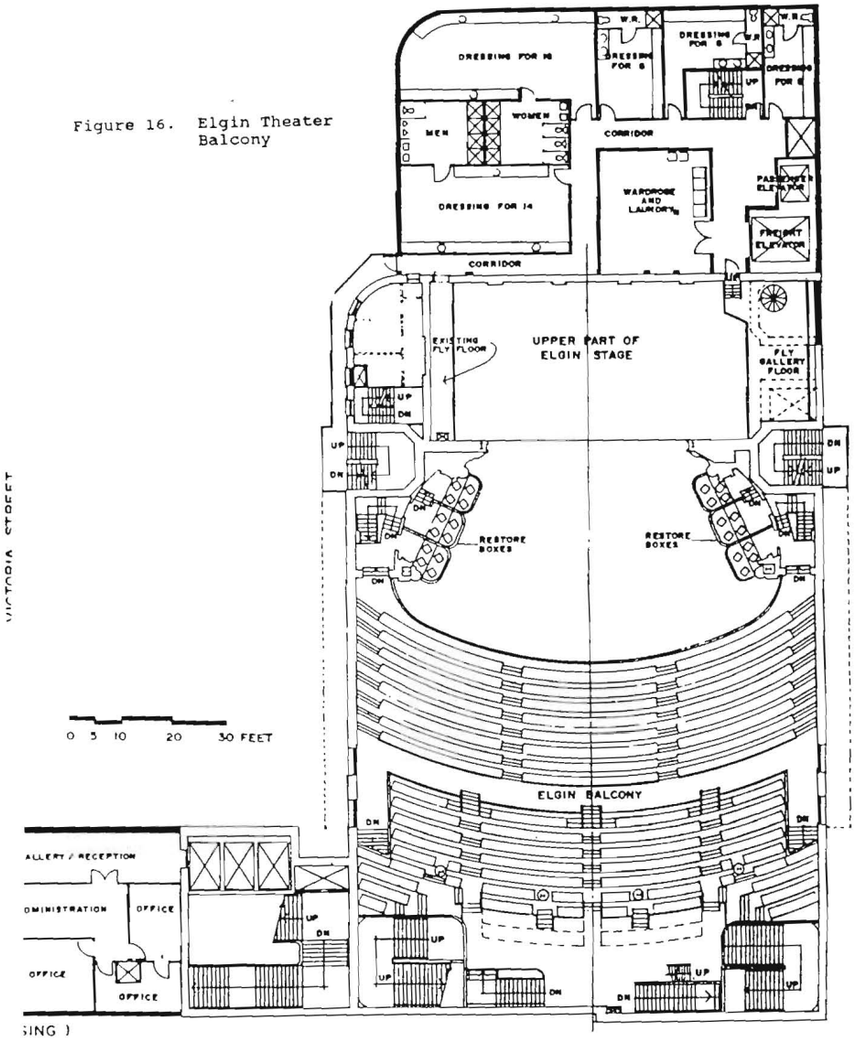

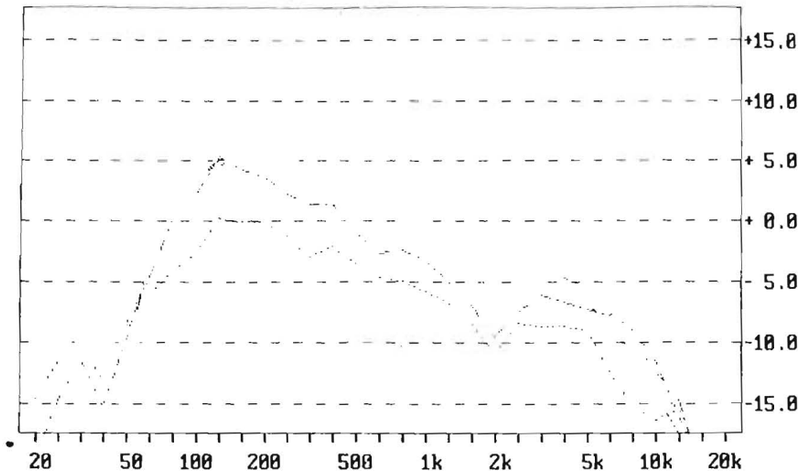

Figure 17 Acoustic output of the ceiling mounted loudspeaker array. Pink noise supplied to reverberators set to full bandwidth, randomization on. ..... = under balcony ---- = above balcony

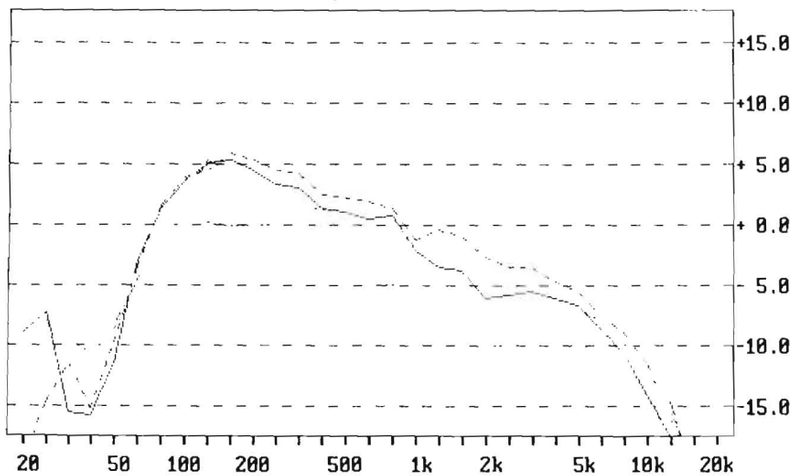

Figure 18 Feedback transfer function - all loudspeakers to B&K pick-up microphones. Pink noise supplied to reverberators set to full bandwidth, randomization on. 1/3 octave equalizers adjusted to flatten this curve.

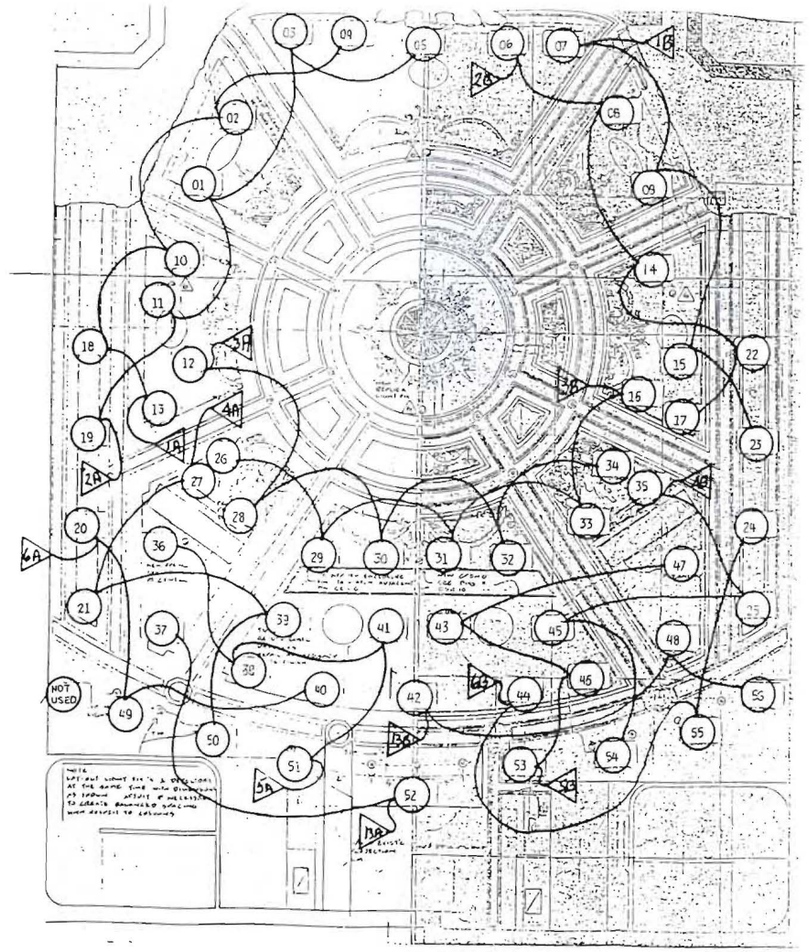

Figure 19 Speaker tiling in the Elgin main ceiling. The original tiling was modified to suit the purposes of a show, but note that for the most part no two adjacent loudspeakers are connected to the same output

Figure 20. Energy Time Curves for the Elgin System

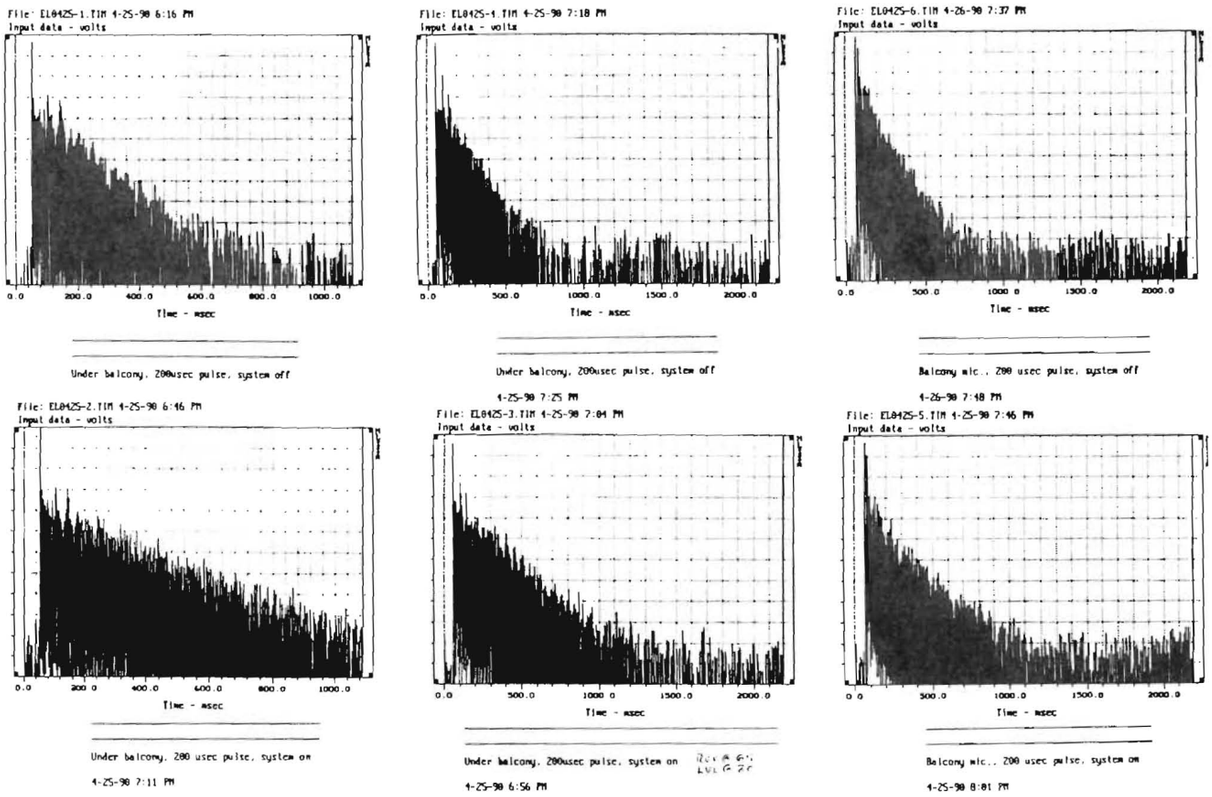

RSES-I INSTALLATION AT ELGIN THEATRE, TORONTO

ENERGY VS TIME LOG/SQUARED RESPONSE TO A 200 MICROSECOND POSITIVE RECTANGULAR PULSE
UPPER POW = SYSTEM OFF LOWER POW = SYSTEM ON, PYBT = 65/127 LYLUP = 80/127 LYLDN = 80/127
VERTICAL SCALE = 5dB/ DIVISION