GL3 ALLEN & HEATH LIVE CONSOLE

FREEDOM OF CHOICE

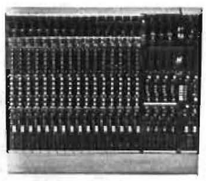

GL3-416

16-4-2-1 (16-6)
W 30.1" (765mm)
D 25.8" (657mm)
H 4.9" (125mm)
weight 43lbs (19.5kg)
packed 68lbs (31kg)

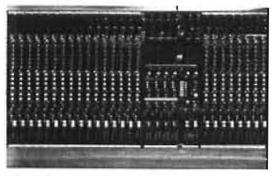

GL3-424

24-4-2-1 (24-6)
W 40.7" (1035mm)
D 25.8" (657mm)
H 4.9" (125mm)
weight 60lbs (27kg)
packed 90lbs (41kg)

GL3-X4

8 channel expander
W 10.6" (270mm)
D 25.8" (657mm)
H 4.9" (125mm)
weight 17lbs (7.5kg)
packed 24lbs (11kg)

MPS9G

External power supply
W 3.9" (100mm)
D 11.8" (300mm)
H 4.3" (110mm)
weight 8lbs (3.5kg)

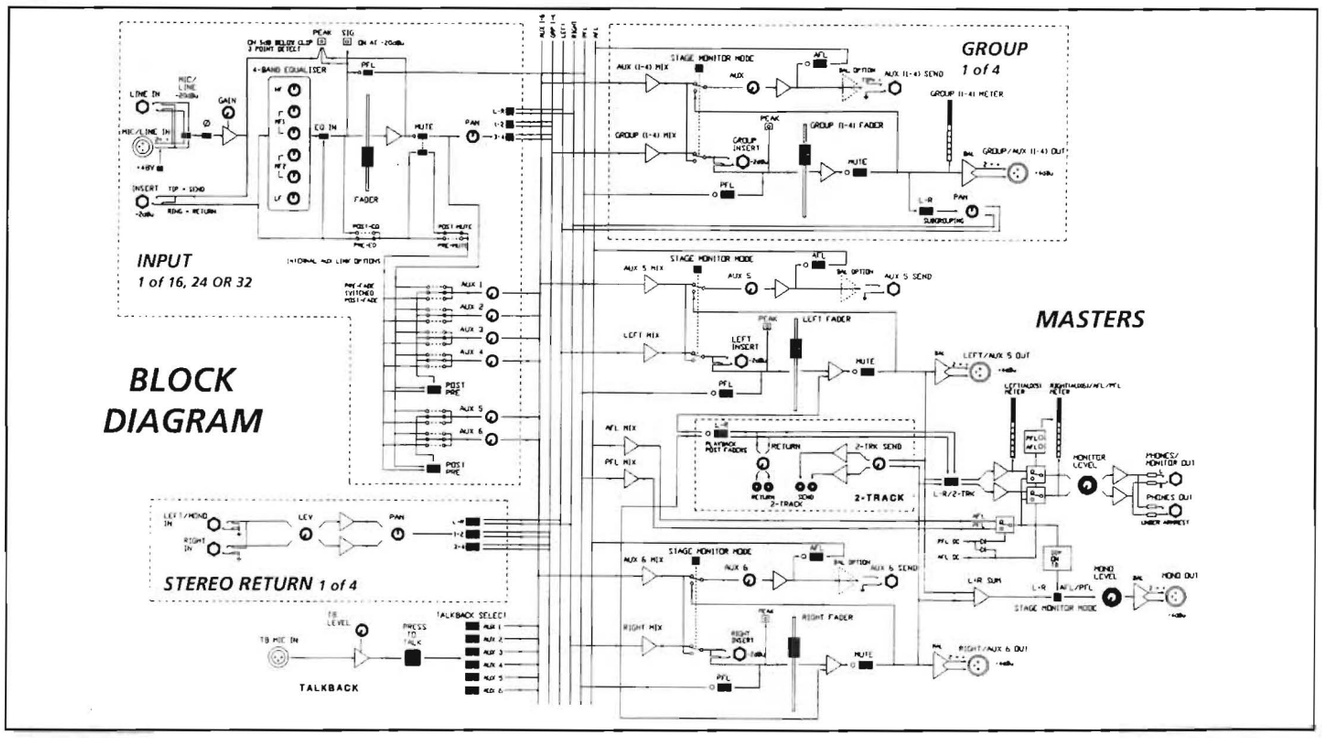

SPECIFICATIONS:

0dBu = 0.775 Volts RMS 0 dBV = 1 Volt RMS
INTERNAL OPERATING LEVEL: -2dBu
INTERNAL HEADROOM: +23dB
MAX OUTPUTS: balanced +27dBu into 600 ohms
unbalanced +21 dBu into 2kohms
METERS: peak responding bargraph 0VU = +4dBu
PEAK LEDs: on 5dB before clipping
SIG LEDs: dynamic responding, on at -20dBu

FREQUENCY RESPONSE: 20Hz TO 20kHz +0/-1 dB
DISTORTION: THD 0.015% Line in to mix out at 1kHz
CROSSTALK: output mute better than 100dB at 1kHz
channel mute better than 75 dB
L-R separation better than 65 dB
NOISE: 22Hz to 22kHz
MIC EIN -128 dB into 150 ohms
LINE pre-amp at 0dB -88 dBu
MIX noise (16 routed) -80 dB ref 0VU

CONSTRUCTION: All metal chassis.
Single panel with individual removable circuit assemblies. Removable base.
External power supply.
POWER REQUIREMENTS: 50/60Hz 100W
Mains voltage set for local requirements.
PHANTOM POWER: +48V DC
Individually switched via 6.8 kohms.

INPUTS:

MIC IN	XLR	pin 2 hot, 3 cold	balanced	2 kohms	variable	-70 to -10 dBu
LINE IN	XLR	pin 2 hot, 3 cold	balanced	10 kohms	variable	-50 to +10 dBu
or	1/4" JACK	tip hot, ring cold	balanced	10 kohms	variable	-50 to +10 dBu
STEREO RETURN	1/4" JACK	tip hot, ring gnd	unbalanced	10 kohms	variable	-10 dBV min
2-TRACK RETURN	RCA PHONO		unbalanced	>6 kohms	variable	-10dBV min
INSERT RETURN	1/4" Jack	tip send, ring ret	unbalanced	>6 kohms	-2dBu	
TALKBACK MIC	XLR	pin 2 hot, 3 gnd	unbalanced	25 kohms	variable	-50 to -4 dBu

OUTPUTS:

L-R out	XLR	pin 2 hot, 3 cold	balanced	50 ohms	+4 dBu	+27 dBu max
MONO OUT	XLR	pin 2 hot, 3 cold	balanced	50 ohms	+4 dBu	+27 dBu max
GROUP OUT	XLR	pin 2 hot, 3 cold	balanced	50 ohms	+4 dBu	+27 dBu max
AUX OUT	1/4" JACK	tip hot, ring gnd	unbalanced	75 ohms	+4 dBu	+21 dBu max
or	option	tip hot, ring cold	balanced	50 ohms	+4 dBu	+27 dBu max
2-TRACK SEND	RCA PHONO		unbalanced	75 ohms	variable	+21 dBu max
INSERT SEND	1/4" JACK	tip send, ring ret	unbalanced	75 ohms	-2 dBu	+21 dBu max
MONITOR OUT	1/4" JACK	tip left, ring right	unbalanced	100 ohms	+4 dBu	+21 dBu max
PHONES OUT	1/4" JACK	tip left, ring right	for stereo headphones 8 to 400 ohms			

DEALER

Manufacturer
Allen & Heath, Kernick Industrial Estate,
Penryn, Cornwall TR10 9LU
Tel: 01326 372070 Fax: 01326 377097

A Harman International Company

ALLEN & HEATH

Printed in England on sustainable forest stock

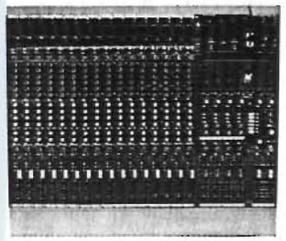

GL3-416

16-4-2-1 (16-6)
W 30.1" (765mm)
D 25.8" (657mm)
H 4.9" (125mm)
weight 43lbs (19.5kg)
packed 68lbs (31kg)

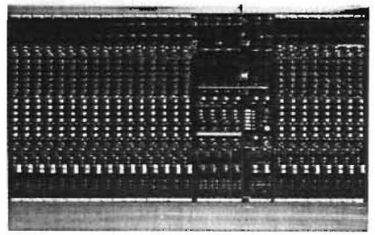

GL3-424

24-4-2-1 (24-6)
W 40.7" (1035mm)
D 25.8" (657mm)
H 4.9" (125mm)
weight 60lbs (27kg)
packed 90lbs (41kg)

GL3-X4

8 channel expander
W 10.6" (270mm)
D 25.8" (657mm)
H 4.9" (125mm)
weight 17lbs (7.5kg)
packed 24lbs (11kg)

MPS9G

External power supply
W 3.9" (100mm)
D 11.8" (300mm)
H 4.3" (110mm)
weight 8lbs (3.5kg)

BLOCK DIAGRAM

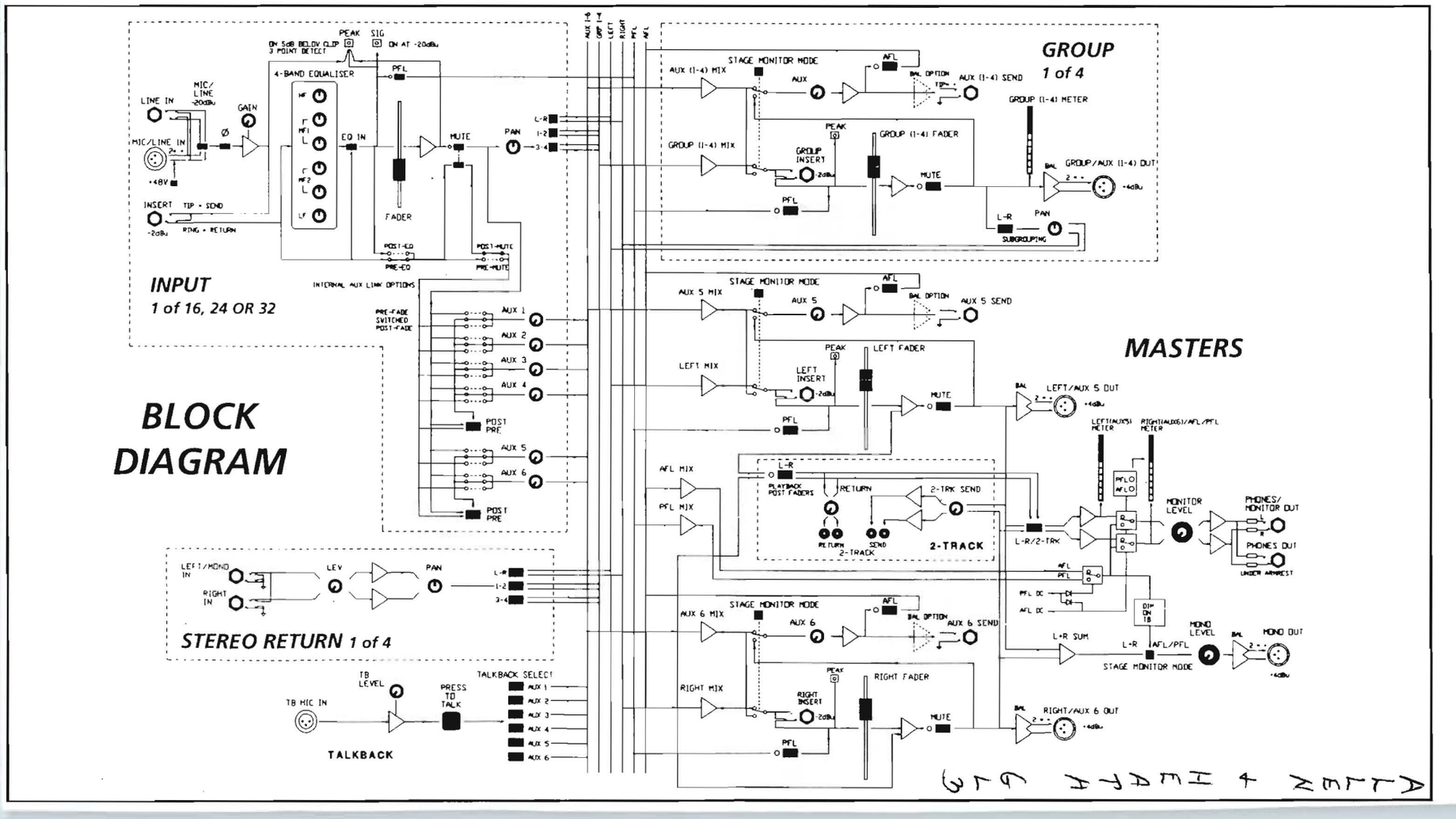

SPIRIT FOLIO RAC PAC

SYSTEM BLOCK DIAGRAM

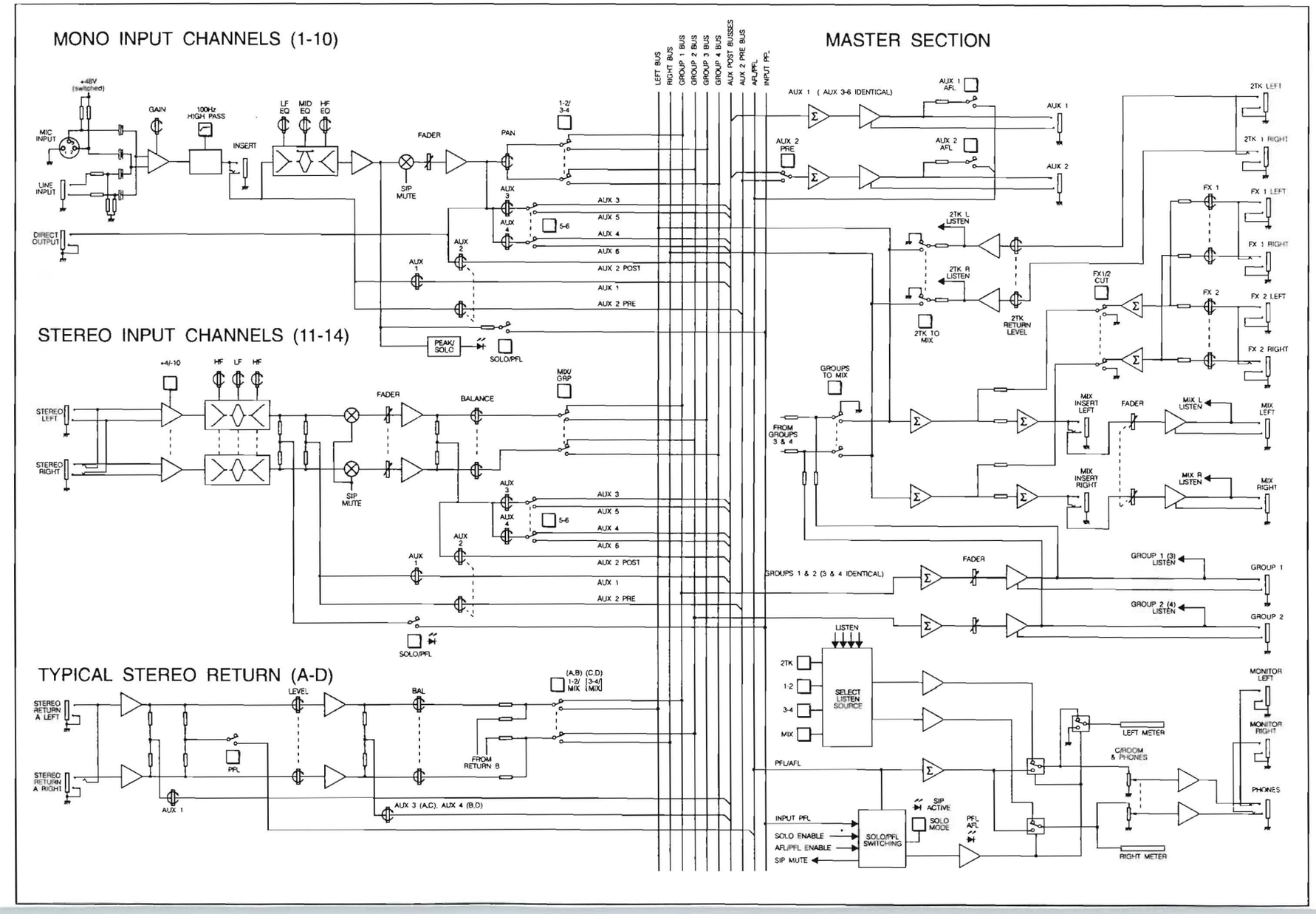

ELECTRONIC PERFORMANCE

0dBv = 0.775 RMS 1kHz
0VU = +4dBv = 1.23 Volts RMS

GAIN

MIC IN to GROUP OUT +82dB max
MIC IN to L/R OUT +72dB max
LINE IN to L/R OUT +50dB max
LINE IN to GROUP OUT +60dB max
GROUP to L/R OUT +10dB max
L/R to MONO OUT +6dB
FX RETURN to L/R OUT +12dB max
AUX RETURN to GROUP OUT +17dB max

Figures include 10dB input and group fader boost.
INPUT GAIN CONTROL RANGE 41dB

FREQUENCY RESPONSE

Equaliser set to flat response or switched out – 20Hz-20kHz +0, –1dB.

OUTPUTS

Max level +21dBv, recommended load 2K ohms or more. With 600 ohms load max level +18dBm.

DISTORTION

THD typically better than 0.05% 20Hz-20kHz at normal levels and gain settings.

EQUALISER

HF continuously variable ± 12dB with shelving characteristic at 8kHz.
3.5kHz continuously variable peak/dip ± 12dB centred at 3.5kHz, Q=0.6
250Hz continuously variable peak/dip ± 12dB centred at 250Hz.
LF continuously variable ± 12dB with shelving characteristic at 80Hz.

Each model is shipped in protective packing with the power supply and one owner handbook which includes technical service data and schematics.

CONSTRUCTION

Steel control panel, stove enamel, epoxy silkscreen legend.
Steel base, black finish with wood trims.
Channel circuit boards are individual, secured to control panel.
Internal bussbar circuits employ removeable harness.
IC op amp circuit design with discreet transistor input pre amp.

NOISE PERFORMANCE

RMS noise 20kHz bandwidth, ref 0VU

MODEL	SR8	SR12	SR16	SR416	SR424
Stereo Output, all inputs routed and faders closed	–89dB	–87dB	–86dB	–85dB	–83dB
Group Output, all inputs routed and faders closed	–	–	–	–79dB	–76dB
Aux Output	–89dB	–86dB	–82dB	–82dB	–79dB

Microphone Input equivalent noise –125dBm (200ohm source).
Line input pre-amp noise at 0dB gain: –88dB.

DIMENSIONS mm(in)

MODEL	SR8	SR12	SR16	SR416	SR424
Width	472 (19)	600 (24)	728 (29)	872 (35)	1128 (45)
Height	100 (4)	100 (4)	100 (4)	100 (4)	100 (4)
Front-to-back	644 (26)	644 (26)	644 (26)	644 (26)	644 (26)
Packet weight kg lbs		20 (44)	25 (55)	26 (58)	35 (77)

All models use power supply AHB MPS8P
The supply voltage setting may be altered to suit local requirements if required. BNC connector (to suit lamps rated 12-15v. 50m A. D.C.).

SR PLUS BLOCK SCHEMATIC

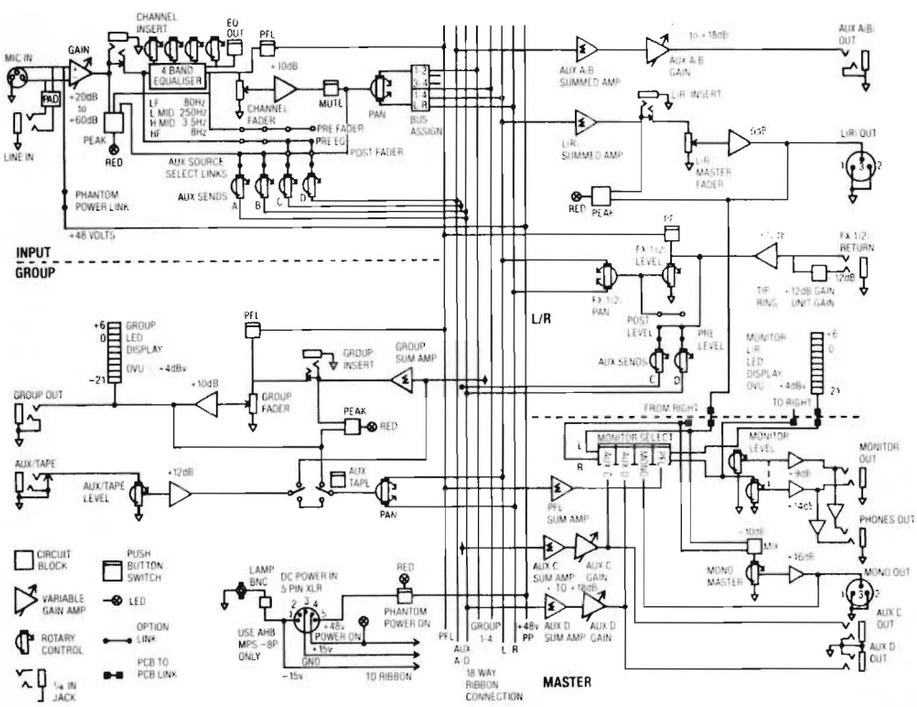

In line with our policy of continuous product improvement we reserve the right to amend the design and specification of equipment without notice.

SR SERIES

SR SERIES BLOCK SCHEMATIC

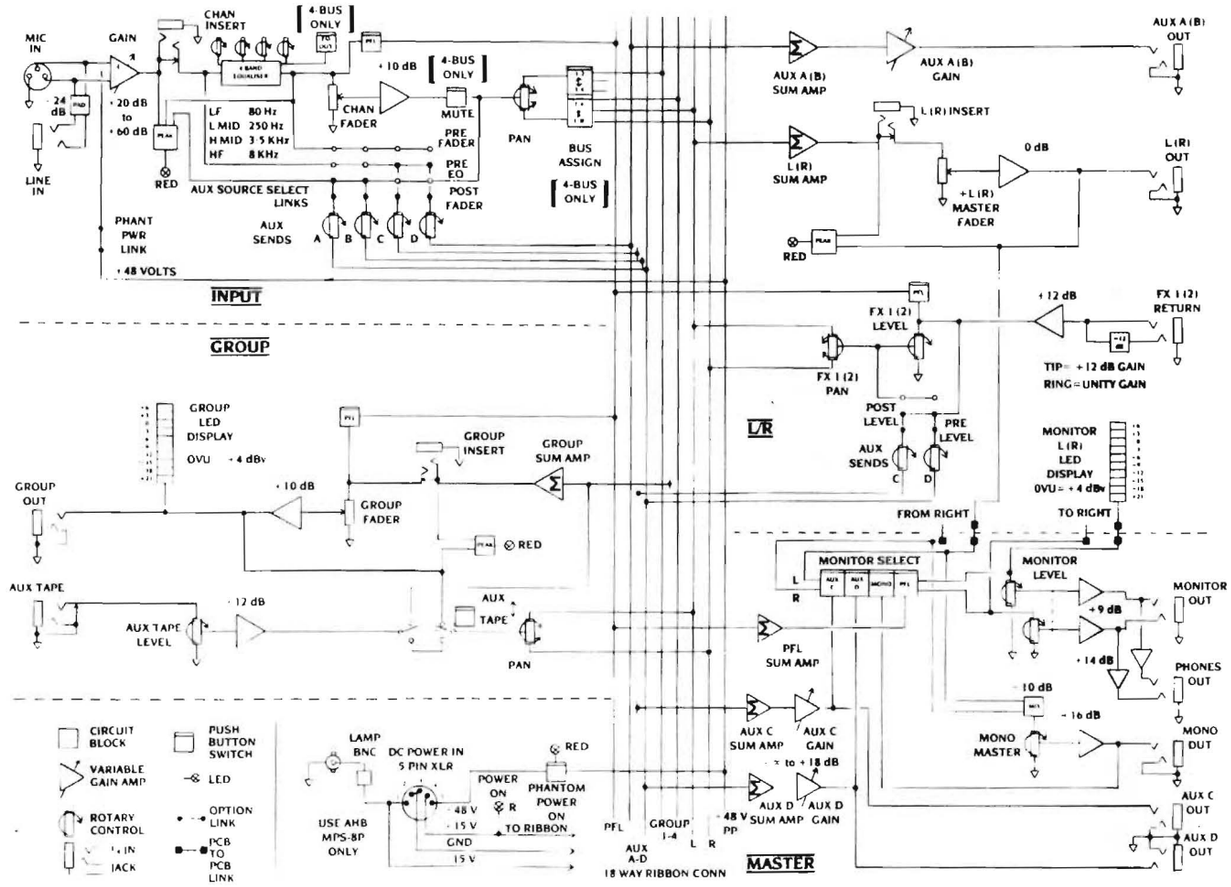

Obtainable From:

mbi AHB

69 Ship Street, Brighton BN1 1AE East Sussex
Tel: (0273) 24928 Telex: 878235 MBI AHB G

5 Connair Road, Orange, Connecticut 06477 USA

SR SERIES

ALLEN + HEATH

SR SERIES BLOCK SCHEMATIC

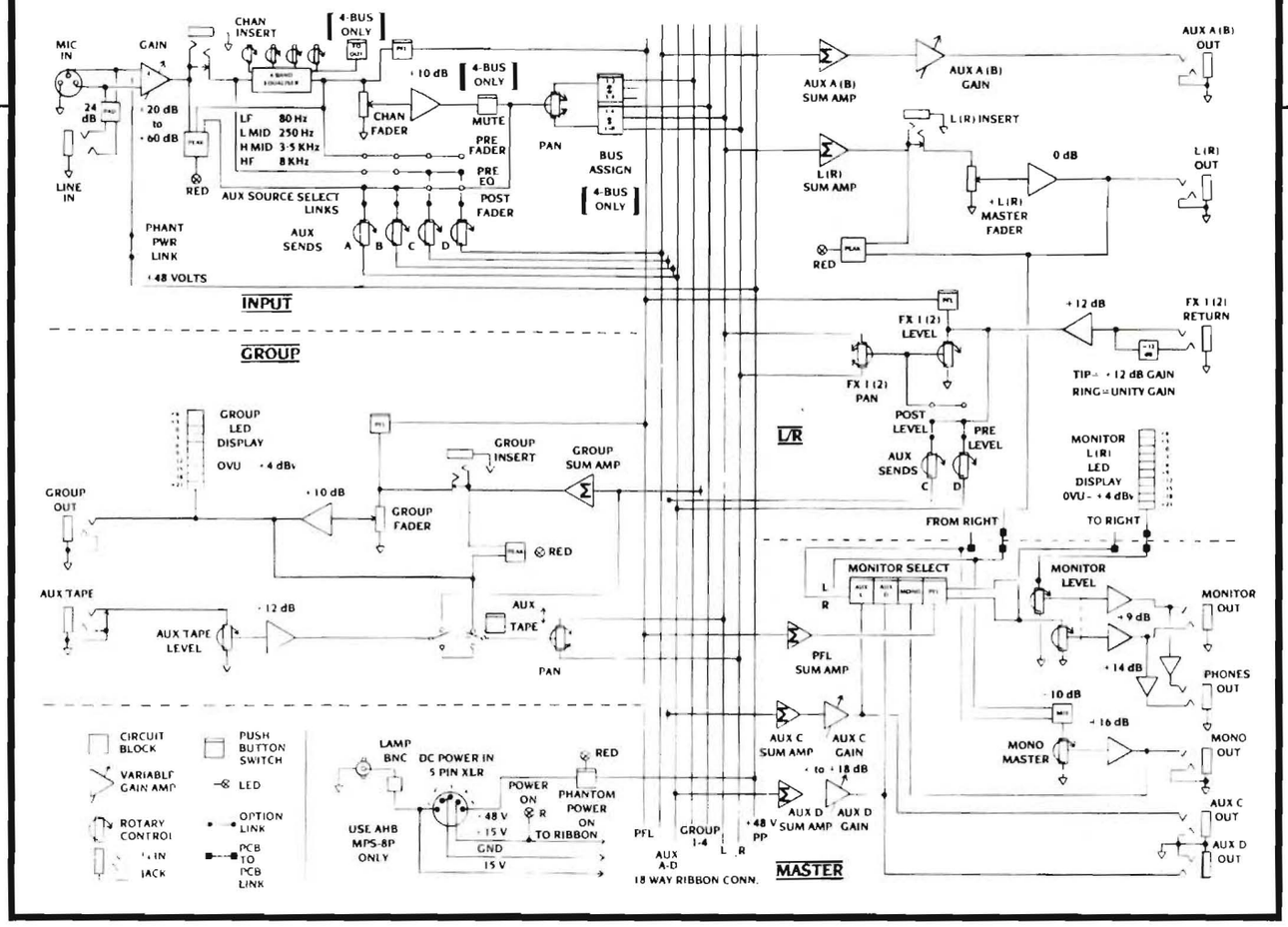

Obtainable From:

mbi AHB

69 Ship Street, Brighton BN1 1AE East Sussex
Tel: (0273) 24928 Telex: 878235 MBI AHB G

5 Connair Road, Orange, Connecticut 06477 USA

ELECTRONIC PERFORMANCE

0dBv = 0.775 RMS 1kHz
0VU = +4dBv = 1.23 Volts RMS

GAIN

MIC IN to GROUP OUT +82dB max
MIC IN to L/R OUT +72dB max
LINE IN to L/R OUT +50dB max
LINE IN to GROUP OUT +60dB max
GROUP to L/R OUT +10dB max
L/R to MONO OUT +6dB
FX RETURN to L/R OUT +12dB max
AUX RETURN to GROUP OUT +17dB max

Figures include 10dB input and group fader boost.
INPUT GAIN CONTROL RANGE 41dB

FREQUENCY RESPONSE

Equaliser set to flat response or switched out – 20Hz-20kHz +0, –1dB.

OUTPUTS

Max level +21dBv, recommended load 2K ohms or more. With 600 ohms load max level +18dBm.

DISTORTION

THD typically better than 0.05% 20Hz-20kHz at normal levels and gain settings.

EQUALISER

HF continuously variable ± 12dB with shelving characteristic at 8kHz.
3.5kHz continuously variable peak/dip ± 12dB centred at 3.5kHz, Q=0.6
250Hz continuously variable peak/dip ± 12dB centred at 250Hz.
LF continuously variable ± 12dB with shelving characteristic at 80Hz.

Each model is shipped in protective packing with the power supply and one owner handbook which includes technical service data and schematics.

CONSTRUCTION

Steel control panel, stove enamel, epoxy silkscreen legend.
Steel base, black finish with wood trims.
Channel circuit boards are individual, secured to control panel.
Internal bussbar circuits employ removeable harness.
IC op amp circuit design with discreet transistor input pre amp.

NOISE PERFORMANCE

RMS noise 20kHz bandwidth, ref 0VU

MODEL	SR8	SR12	SR16	SR416	SR424
Stereo Output, all inputs routed and faders closed	–89dB	–87dB	–86dB	–85dB	–83dB
Group Output, all inputs routed and faders closed	–	–	–	–79dB	–76dB
Aux Output	–89dB	–86dB	–82dB	–82dB	–79dB

Microphone Input equivalent noise –125dBm (200ohm source).
Line input pre-amp noise at 0dB gain: –88dB.

DIMENSIONS mm(in)

MODEL	SR8	SR12	SR16	SR416	SR424
Width	472 (19)	600 (24)	728 (29)	872 (35)	1128 (45)
Height	100 (4)	100 (4)	100 (4)	100 (4)	100 (4)
Front-to-back	644 (26)	644 (26)	644 (26)	644 (26)	644 (26)
Packet weight kg lbs		20 (44)	25 (55)	26 (58)	35 (77)

All models use power supply AHB MPS8P
The supply voltage setting may be altered to suit local requirements if required. BNC connector (to suit lamps rated 12-15v, 50m A, D.C.).

SR PLUS BLOCK SCHEMATIC

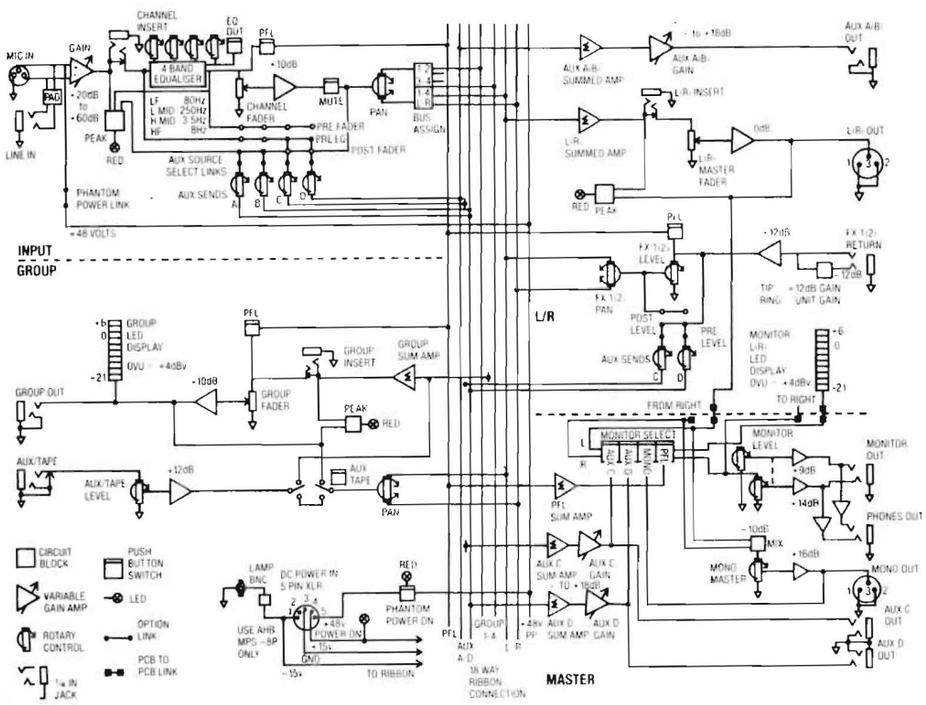

SR SERIES

AHB

SOUND REINFORCEMENT

The **AHB SR** Series are a versatile range of sound mixing consoles designed for live sound usage and stereo or 4-track recording.

Constructed of high quality durable materials, designed and matched with components that allow ease of use, they represent the ideal equipment for high quality sound reinforcement through fixed installations or touring PA systems.

The panel colouring is designed so that under poor lighting conditions the graphics are easily read, where circumstances prevail, a connector is provided for gooseneck lights.

The SR series includes the following models:

SR8 stereo and mono outputs, 8 input channels.
SR12 stereo and mono outputs, 12 input channels.
SR16 stereo and mono outputs, 16 input channels.
SR24 stereo and mono outputs, 24 input channels.
SR416 four group, stereo and mono outputs, 16 input channels.
SR424 four group, stereo and mono outputs, 24 input channels.

All models use power supply AHB MPS8P.

CONSTRUCTION:

1. Steel control panel, stove enamel, epoxy silkscreen legend.
2. Steel base, black finish with furniture trims.
3. Channel circuit boards are individual, secured to control panel.
4. Internal bussbar circuits employ removeable harness.
5. IC op amp circuit design with discreet transistor input pre amp.

ELECTRONIC PERFORMANCE:

0dBv=0.775 RMS 1kHz
OVU=+4dBv=1.23V RMS

GAIN:

MIC IN to GROUP OUT	+80dB max
MIC IN to L/R OUT	+70dB max
LINE IN to GROUP OUT	+50dB max
LINE IN to L/R OUT	+40dB max
GROUP to L/R OUT	+10dB max
L/R to MONO OUT	+6dB
FX RETURN to L/R OUT	+12dB max
AUX RETURN to GROUP OUT	+17dB max

figures include 10dB input & group fader boost.

Input gain control range – 40dB

FREQUENCY RESPONSE:
Equaliser set to flat response – 20Hz-20kHz +0, –1dB.

OUTPUTS:
Max level +21dBv, recommended load 2K ohms or more. With 600 ohms load max level +18dBm.

DISTORTION:
THD typically 0.05% 20Hz-20kHz at normal levels and gain settings.

AC SUPPLY VOLTAGES:
Supply type MPS8P provides the DC supply for all mixer functions including 48V. phantom power. It is factory set for operation on the required AC supply as follows:

Europe	220/240v AC 50Hz
North America	110/120v AC 60Hz
Japan	100v or 110/120 or 220/240v AC.

The supply voltage setting may be altered to suit local requirements if required. BNC connector (to suit lamps rated 12-15v, 50m A. D.C.)

NOISE PERFORMANCE: RMS noise 20kHz bandwidth. ref OVU

MODEL:	SR8	SR12	SR16	SR24	SR416	SR424
i STEREO OUTPUT, all inputs routed & faders closed.	–87dB	–85dB	–84dB	–81dB	–84dB	–81dB
ii GROUP OUTPUT, all inputs routed & faders closed.					–78dB	–74dB
iii AUX OUTPUT	–89dB	–84dB	–82dB	–79dB	–82dB	–79dB

iv MICROPHONE INPUT equivalent noise –125dBm (200 ohm source).

EQUALISER:
HF continuously variable ±12dB with shelving characteristic at 8kHz
3.5kHz continuously variable peak/dip ±12dB centred at 3.5kHz, Q=0.6
250Hz continuously varable peak/dip ±12dB centred at 250Hz.
LF continuously variable ±12dB with shelving characteristic at 80Hz.

Each model is shipped in protective packing with the power supply and one owner handbook which includes technical service data and schematics.

DIMENSIONS MM (IN.)	SR8	SR12	SR16	SR24	SR416	SR424	MPS8P
WIDTH	472 (19)	600 (24)	728 (29)	984 (39)	872 (35)	1128 (45)	85 (4)
HEIGHT	100 (4)	100 (4)	100 (4)	100 (4)	100 (4)	100 (4)	75 (3)
FRONT TO BACK	644 (26)	644 (26)	644 (26)	644 (26)	644 (26)	644 (26)	285 (12)
WEIGHT KG. (LBS.)	16 (36)	20 (44)	25 (55)	31 (69)	26 (58)	35 (77)	

ALLEN AND HEATH BRENELL LTD.
In line with our policy of continuous product improvement, we reserve the right to amend the design and specification of equipment without notice.

CONTROL FUNCTIONS

2dB max
7dB max

0dB

00 ohms

ings.

ions
the

ments if
C.)

SR424
–81dB

–74dB

–79dB
source).

8kHz.
Hz, Q=0.6

80Hz.
pply and
d

INPUT CHANNEL

¼" line level Input Jack accepts balanced or unbalanced signals.

XLR Microphone input electronically balanced.

Pre-Equaliser Insertion Point allowing processing equipment to be patched into individual channels.

Channel Gain control 10dB to 60dB range.

4 Band Fixed E.Q. High Frequency Shelving 8KHz
High Mid Frequency Peaking 3KHz
Low Mid Frequency Peaking 250KHz
Low Frequency Shelving 80Hz

E.Q. By-pass Switch*

4 Auxiliary Sends
2 pre fader/pre E.Q.
2 post fader
Configuration user Modifiable A & B used as effects sends
C & D used as monitor sends

Buss Assignment Direct to L/R or submaster ½ or ⅓*

Left Right Pan Control

Channel PFL Switch
Channel Mute Switch*
Input channel, Peak LED indicator. Illuminates when channel approaches overload.

Channel 100mm long throw fader.

(* – SR 416 and 424 models only.)

Scribble patch.

GROUPS

Output of group to tape machine etc.

Insertion point for aux effect returns or tape monitor.

Insert allowing processing equipment to be patched into individual groups.

Group meter, monitors the output level of the group. Range – 21 to +6 Vu (0 Vu= +4dbV).

Aux/tape level control. Controls the return level of the signal selected by Aux/tape switch.

Aux/tape Switch. Selects the function of the group auxiliary return circuit to act as an aux effect return to the group or a tape monitor to the stereo mix.

Left/Right Pan Control. Controls the position of the group signal in the stereo image.
Group PFL Switch. Injects pre-fader group signal into PLF mix buss.
Peak Indicator LED warns of impending group overload.

Group 100mm long throw fader.

Scribble patch.

OUTPUT CHANNELS

L(R) master outputs of Desk.

Aux A(B) source for FX devices.

Returns from FX devices.

Insert allowing processing equipment to be patched into the stereo output channels.

L(R) meters. Follow the mode selection switch with choice of Stereo Output, Mono Output, PFL signal. Aux outputs C or D (usual monitor outputs). When no switch is depressed meters indicate L/R output of mixer.

Aux A(B) Master output level controls for aux mixes A & B.

FX Returns 1 (& 2) Aux C, controls FX return to monitor mix C. Aux D, controls FX return to monitor mix D. Level controls amount of FX returned to L/R Outputs. Pan positions FX returns within the stereo image.

FX Returns PFL select switch.

L(R) overload peak warning LED.

L(R) 100mm long throw faders. Master level of stereo output as well as summed mix for mono output.

Scribble patch.

MASTER

Monitor Output.

Aux C/D outputs for foldback.

Summed Mono output of desk.

Power on indicator LED.

Phantom Power on/off switch.

Master Output levels Aux C & D. Control the final output level of aux mix busses C & D.

Mono Level Control. Controls the final level of the mono output.

Monitor source selection including PFL master switch. Monitor output level control.

Headphone Jack Socket, signal follows the monitor select switches at the level selected by the monitor level control.

MIXING ART WITH SCIENCE

SR SERIES

SR SERIES BLOCK SCHEMATIC

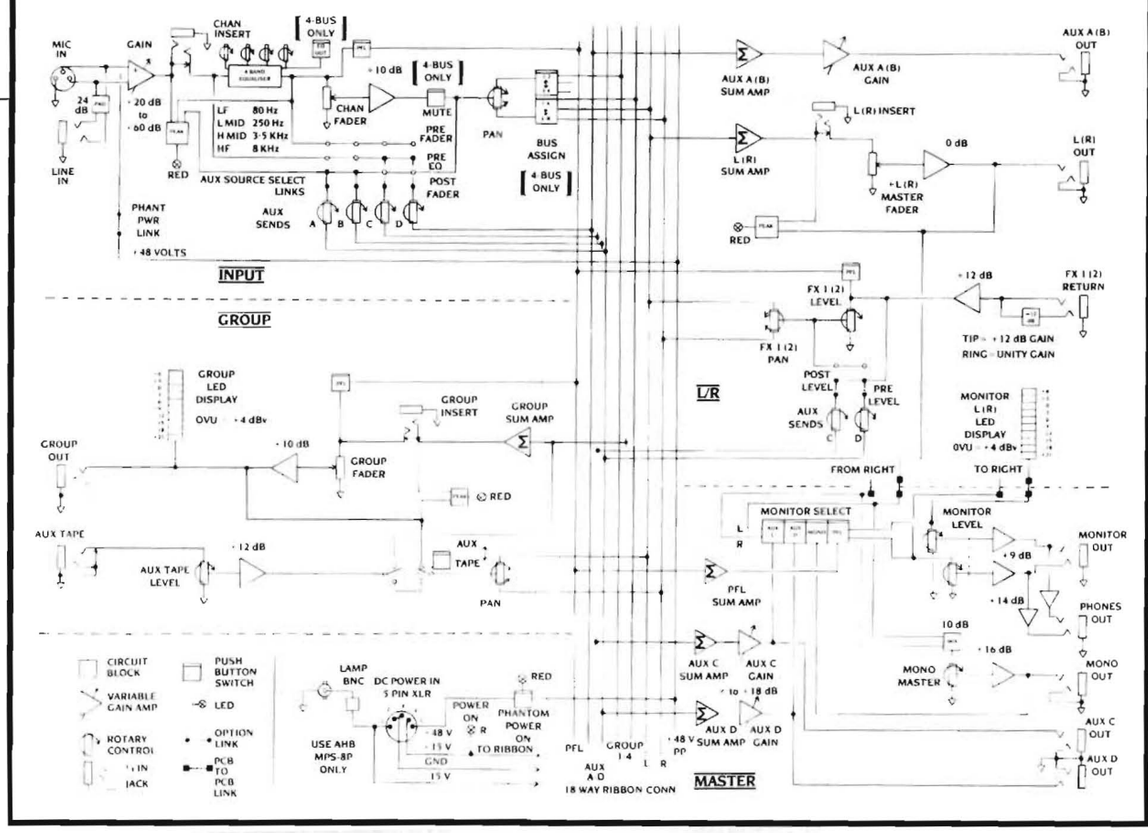

Obtainable From:

mbi AHB

69 Ship Street, Brighton BN1 1AE East Sussex
Tel: (0273) 24928 Telex: 878235 MBI AHB G

5 Connair Road, Orange, Connecticut 06477 USA
Tel: (203) 795 3594

SR PLUS

Sound Mixing Consoles

building on success

Sound Reinforcement

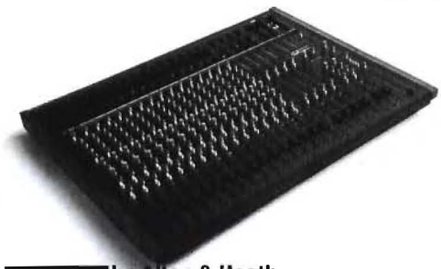

The Allen & Heath SR plus series of sound reinforcement consoles is a development of their highly successful SR range.

SR mixers are installed in churches, leisure centres, theatres and concert halls around the world, including the Purcell Room at London's South Bank Centre.

SR consoles are frequently behind the quality sound demanded for todays professional product launches and commercial presentations.

SR Plus, like its predecessor, has been designed and built for the rugged life led by a touring board.

SR Plus now has an input pad switch operating on both microphone and line inputs for maximum flexibility on gain matching and XLR connectors are provided for left, right and mono outputs. These can be balanced with the Allen & Heath ground sensing electronic output balance amplifier.

SR plus stands for Sound Reinforcement – now more than ever.

Control Functions

PRODUCT RANGE

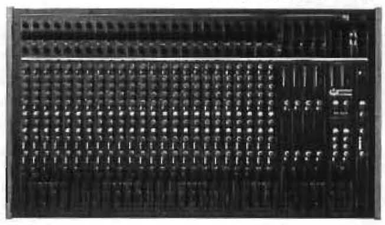

SR424 four group, stereo and mono outputs, 24 input channels

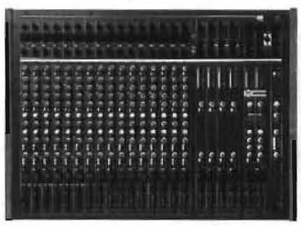

SR416 four group, stereo and mono outputs, 16 input channels

SR16 stereo and mono outputs,16 input channels

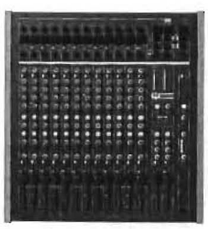

SR12 stereo and mono outputs,12 input channels

SR8 stereo and mono outputs, 8 input channels

INPUT CHANNEL

LIVE LEVEL INPUT JACK
1/4" Jack accepts balanced or unbalanced signals.

MICROPHONE INPUT XLR
Electronically balanced input with phantom powering.

INSERT JACK
Pre-equaliser insertion point.

INPUT GAIN
Adjusts pre-amplifier to suit various input levels.

PAD SWITCH
Reduces Mic input by 18 dB or line input by 12 dB.

HF CONTROL
Shelving characteristic with ±12 dB cut/boost at a corner frequency of 8 kHz.

HIGH MF CONTROL
Peaking characteristic with ±12 dB cut/boost at a centre frequency of 3.5 kHz.

LOW MF CONTROL
Peaking characteristic with ±12 dB cut/boost at a centre frequency of 250 Hz.

LF CONTROL
Shelving characteristic with ±12 dB cut/boost at a corner frequency of 80 Hz.

EQ CUT SWITCH
By pass switch for the equaliser section allowing instant comparisons.

AUX SEND LEVELS A,B,C,D
Allows up to four mixes of input sources for foldback, echo and cue mixes. A & B post fade, C & D pre eq, (internal links allow optional -re eq, pre fade or post fade sends.)

ASSIGNMENT SWITCHES (SR Plus 416, SR Plus 424 ONLY)
Selects the channel to groups 1 - 4 or L - R outputs.

PAN CONTROL
Used to position the input in the stero mix or between a pair of groups.

PFL SWITCH
Monitors pre fader signal to allow cueing of input signal.

MUTE SWITCH (SR Plus 416, SR Plus 424 ONLY)

PEAK INDICATOR
LED warns of imminent overload (clipping)

CHANNEL FADER
With 10 dB boost available.

GROUP OUTPUT

GROUP OUTPUT JACK
With optional electronically balanced output.

AUX INPUT JACK

TAPE INPUT JACK

GROUP INSERT JACK
Pre fade insertion point.

GROUP METER
10 segment VU characteristic display giving visual indication of group output signal level.

AUX/TAPE SWITCH AND LEVEL CONTROL
With switch in aux position, signals from an external source can be mixed into the group with the level control. With switch in the tape position, group output no longer feeds the pan control and the tape input is fed to the L - R outputs via the level and pan controls. The group fader always feeds the group output jack.

PAN CONTROL
Used to position the signal in the stereo mix.

GROUP PFL SWITCH
Monitors pre-fader signal to allow cueing of group signal.

PEAK INDICATOR
LED warns of imminent overload (clipping).

GROUP FADER
With 10 dB boost available.

STEREO OUTPUT

R (L) MASTER OUTPUT XLRs
With optional electronically balanced output.

AUX B (A) OUTPUT JACK

FX RETURN 2 (1) INPUT JACK
Dual level input connector

R (L) INSERT JACK
pre fader insertion point

R (L) MONITOR METER
10 segment Vu characteristic display giving visual indication of the selected monitor source.

AUX B (A) LEVEL CONTROL
Auxiliary mix master output level control.

FX RETURN 2 (1)
Line input signal can be added to the stereo mix and to aux mixes C and D. A level control, 2 Aux send controls and a pan control are provided, along with a PFL switch.

PEAK INDICATOR
LED warns of imminent overload (clipping).

MASTER R (L) OUTPUT FADER
Controls the level to the stereo output and mono summing amplifier.

MASTER SECTION

MONO OUTPUT XLR
With optional electronically balanced output.

AUX D OUTPUT JACK

AUX C OUTPUT JACK

MONITOR OUTPUT JACK
Unbalanced stereo monitor output.

PHANTOM POWER LED AND SWITCH
Switches the 48 volt phantom power for the microphones on and off.

AUX C LEVEL CONTROL
Master output level control.

AUX D LEVEL CONTROL
Master output level control.

MONO LEVEL CONTROL
Master control of summed L-R mix (MONO) output.

MONITOR SOURCE SELECT SWITCHES
Selects the signal for headphone or control room monitoring and monitor meters.

MONITOR LEVEL CONTROL
Sets listening level for both monitor and headphone output.

HEADPHONE JACK

ELECTRONIC PERFORMANCE

0dBv = 0.775 RMS 1kHz
0VU = +4dBv = 1.23 Volts RMS

GAIN

MIC IN to GROUP OUT +82dB max
MIC IN to L/R OUT +72dB max
LINE IN to L/R OUT +50dB max
LINE IN to GROUP OUT +60dB max
GROUP to L/R OUT +10dB max
L/R to MONO OUT +6dB
FX RETURN to L/R OUT +12dB max
AUX RETURN to GROUP OUT +17dB max

Figures include 10dB input and group fader boost.
INPUT GAIN CONTROL RANGE 41dB

FREQUENCY RESPONSE

Equaliser set to flat response or switched out – 20Hz-20kHz +0, –1dB.

OUTPUTS

Max level +21dBv, recommended load 2K ohms or more. With 600 ohms load max level +18dBm.

DISTORTION

THD typically better than 0.05% 20Hz-20kHz at normal levels and gain settings.

EQUALISER

HF continuously variable ±12dB with shelving characteristic at 8kHz.
3.5kHz continuously variable peak/dip ±12dB centred at 3.5kHz, Q=0.6
250Hz continuously variable peak/dip ±12dB centred at 250Hz.
LF continuously variable ±12dB with shelving characteristic at 80Hz.

Each model is shipped in protective packing with the power supply and one owner handbook which includes technical service data and schematics.

CONSTRUCTION

Steel control panel, stove enamel, epoxy silkscreen legend.
Steel base, black finish with wood trims.
Channel circuit boards are individual, secured to control panel.
Internal bussbar circuits employ removeable harness.
IC op amp circuit design with discreet transistor input pre amp.

NOISE PERFORMANCE

RMS noise 20kHz bandwidth, ref 0VU

MODEL	SR8	SR12	SR16	SR416	SR424
Stereo Output, all inputs routed and faders closed	–89dB	–87dB	–86dB	–85dB	–83dB
Group Output, all inputs routed and faders closed	–	–	–	–79dB	–76dB
Aux Output	–89dB	–86dB	–82dB	–82dB	–79dB

Microphone Input equivalent noise –125dBm (200ohm source).
Line input pre-amp noise at 0dB gain: –88dB.

DIMENSIONS mm(in)

MODEL	SR8	SR12	SR16	SR416	SR424
Width	472 (19)	600 (24)	728 (29)	872 (35)	1128 (45)
Height	100 (4)	100 (4)	100 (. 4)	100 (4)	100 (4)
Front-to-back	644 (26)	644 (26)	644 (26)	644 (26)	644 (26)
Packet weight kg lbs		20 (44)	25 (55)	26 (58)	35 (77)

All models use power supply AHB MPS8P
The supply voltage setting may be altered to suit local requirements if required. BNC connector (to suit lamps rated 12-15v, 50m A, D.C.).

SR PLUS BLOCK SCHEMATIC

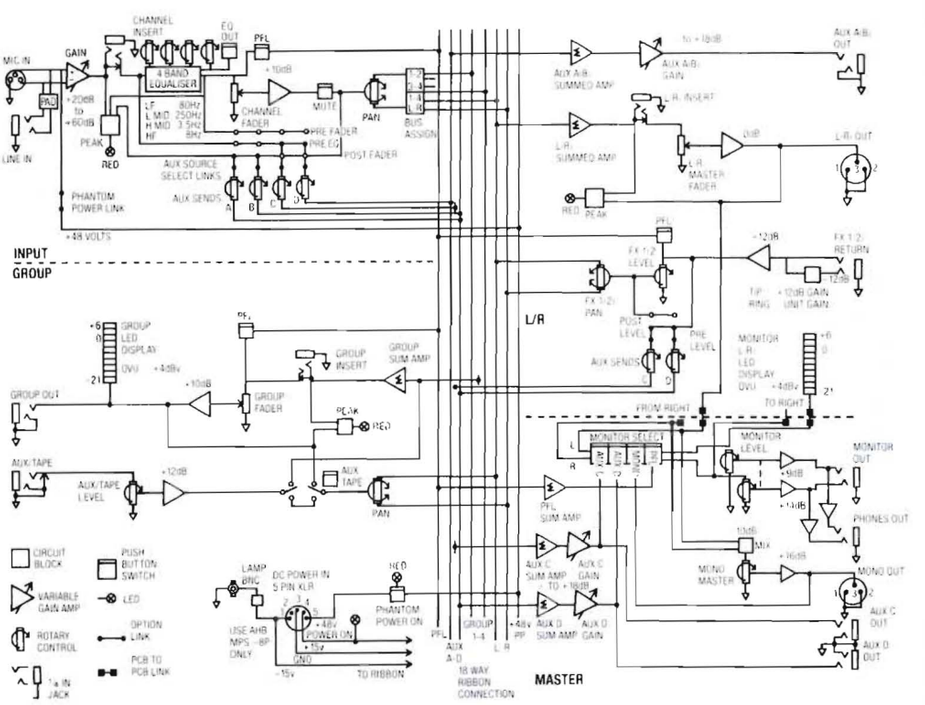

UK
69 Ship Street
Brighton BN1 1AE
Tel: 0273 24928
Fax: 0273 821767
Telex: 878235 MBIAHB G

USA
5 Connair Road
Orange
Connecticut 06477
Tel: (203) 795 3594
Fax: (203) 795 6814

In line with our policy of continuous product improvement, we reserve the right to amend the design and specification of equipment without notice.

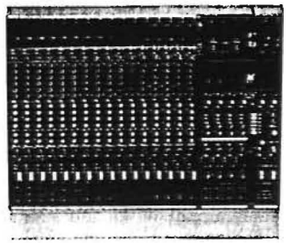

GL3-416

16-4-2-1 (16-6)
W 30.1" (765mm)
D 25.8" (657mm)
H 4.9" (125mm)
weight 43lbs (19.5kg)
packed 68lbs (31kg)

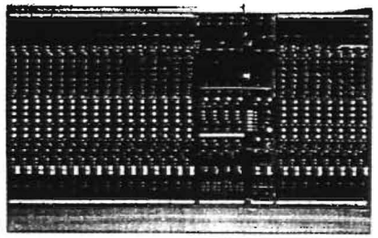

GL3-424

24-4-2-1 (24-6)
W 40.7" (1035mm)
D 25.8" (657mm)
H 4.9" (125mm)
weight 60lbs (27kg)
packed 90lbs (41kg)

GL3-X4

8 channel expander
W 10.6" (270mm)
D 25.8" (657mm)
H 4.9" (125mm)
weight 17lbs (7.5kg)
packed 24lbs (11kg)

MPS9G

External power supply
W 3.9" (100mm)
D 11.8" (300mm)
H 4.3" (110mm)
weight 8lbs (3.5kg)

BLOCK DIAGRAM

INPUT
1 of 16, 24 OR 32

GROUP
1 of 4

MASTERS

STEREO RETURN 1 of 4

TALKBACK

ALLEN + HEATH GL3

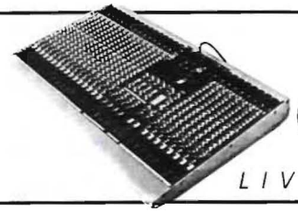

GL3 LIVE CONSOLE

ALLEN & HEATH

FLEXIBLE FRONT-OF-HOUSE AND STAGE MONITOR CONSOLE

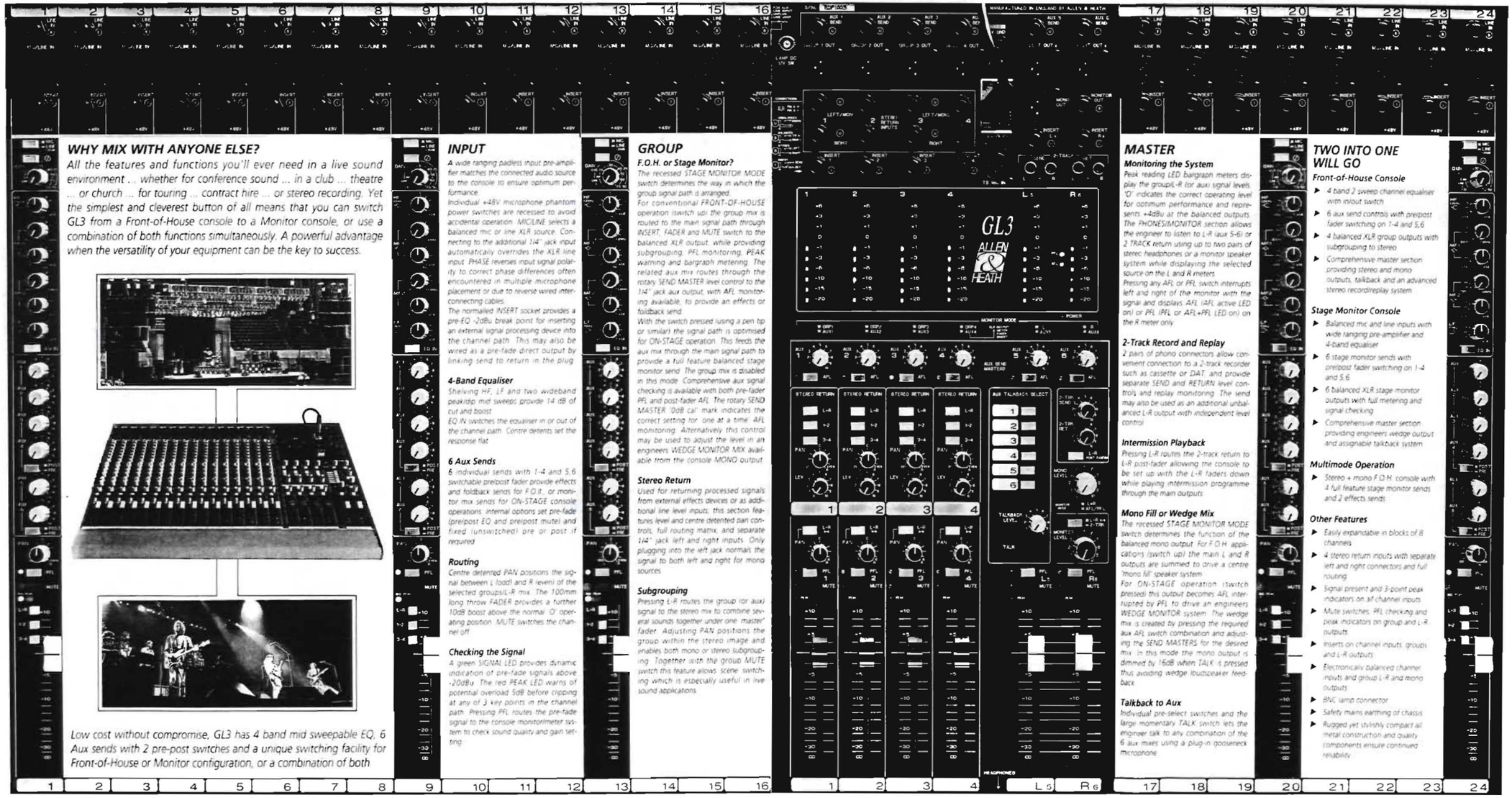

WHY MIX WITH ANYONE ELSE?

All the features and functions you'll ever need in a live sound environment ... whether for conference sound ... in a club ... theatre ... or church ... for touring ... contract hire ... or stereo recording. Yet the simplest and cleverest button of all means that you can switch GL3 from a Front-of-House console to a Monitor console, or use a combination of both functions simultaneously. A powerful advantage when the versatility of your equipment can be the key to success.

Low cost without compromise, GL3 has 4 band mid sweepable EQ, 6 Aux sends with 2 pre-post switches and a unique switching facility for Front-of-House or Monitor configuration, or a combination of both

INPUT

A wide ranging padless input pre-amplifier matches the connected audio source to the console to ensure optimum performance.

Individual +48V microphone phantom power switches are recessed to avoid accidental operation. MIC/LINE selects a balanced mic or line XLR source. Connecting to the additional 1/4" jack input automatically overrides the XLR line input. PHASE reverses input signal polarity to correct phase differences often encountered in multiple microphone placement or due to reverse wired interconnecting cables.

The normalled INSERT socket provides a pre-EQ -2dBu break point for inserting an external signal processing device into the channel path. This may also be wired as a pre-fade direct output by linking send to return in the plug.

4-Band Equaliser

Shelving HF, LF and two wideband peak/dip mid sweeps provide 14 dB of cut and boost.

EQ IN switches the equaliser in or out of the channel path. Centre detents set the response flat.

6 Aux Sends

6 individual sends with 1-4 and 5,6 switchable pre/post fader provide effects and foldback sends for F.O.H., or monitor mix sends for ON-STAGE console operations. Internal options set pre-fade (pre/post EQ and pre/post mute) and fixed (unswitched) pre or post if required.

Routing

Centre detented PAN positions the signal between L (odd) and R (even) of the selected groups/L-R mix. The 100mm long throw FADER provides a further 10dB boost above the normal 'O' operating position. MUTE switches the channel off.

Checking the Signal

A green SIGNAL LED provides dynamic indication of pre-fade signals above -20dBu. The red PEAK LED warns of potential overload 5dB before clipping at any of 3 key points in the channel path. Pressing PFL routes the pre-fade signal to the console monitor/meter system to check sound quality and gain setting.

GROUP

F.O.H. or Stage Monitor?

The recessed STAGE MONITOR MODE switch determines the way in which the group signal path is arranged.

For conventional FRONT-OF-HOUSE operation (switch up) the group mix is routed to the main signal path through INSERT, FADER and MUTE switch to the balanced XLR output, while providing subgrouping, PFL monitoring, PEAK warning and bargraph metering. The related aux mix routes through the rotary SEND MASTER level control to the 1/4" jack aux output, with AFL monitoring available, to provide an effects or foldback send.

With the switch pressed (using a pen tip or similar) the signal path is optimised for ON-STAGE operation. This feeds the aux mix through the main signal path to provide a full feature balanced stage monitor send. The group mix is disabled in this mode. Comprehensive aux signal checking is available with both pre-fader PFL and post-fader AFL. The rotary SEND MASTER '0dB cal' mark indicates the correct setting for one at a time AFL monitoring. Alternatively this control may be used to adjust the level in an engineers WEDGE MONITOR MIX available from the console MONO output.

Stereo Return

Used for returning processed signals from external effects devices or as additional line level inputs, this section features level and centre detented pan controls, full routing matrix, and separate 1/4" jack left and right inputs. Only plugging into the left jack normals the signal to both left and right for mono sources.

Subgrouping

Pressing L-R routes the group (or aux) signal to the stereo mix to combine several sounds together under one 'master' fader. Adjusting PAN positions the group within the stereo image and enables both mono or stereo subgrouping. Together with the group MUTE switch this feature allows scene switching which is especially useful in live sound applications.

MASTER

Monitoring the System

Peak reading LED bargraph meters display the groups/L-R (or aux) signal levels. '0' indicates the correct operating level for optimum performance and represents +4dBu at the balanced outputs. The PHONES/MONITOR section allows the engineer to listen to L-R (aux 5-6) or 2 TRACK return using up to two pairs of stereo headphones or a monitor speaker system while displaying the selected source on the L and R meters.

Pressing any AFL or PFL switch interrupts left and right of the monitor with the signal and displays AFL (AFL active LED on) or PFL (PFL or AFL+PFL LED on) on the R meter only.

2-Track Record and Replay

2 pairs of phono connectors allow convenient connection to a 2-track recorder such as cassette or DAT, and provide separate SEND and RETURN level controls and replay monitoring. The send may also be used as an additional unbalanced L-R output with independent level control.

Intermission Playback

Pressing L-R routes the 2-track return to L-R post-fader allowing the console to be set up with the L-R faders down while playing intermission programme through the main outputs.

Mono Fill or Wedge Mix

The recessed STAGE MONITOR MODE switch determines the function of the balanced mono output. For F.O.H. applications (switch up) the main L and R outputs are summed to drive a centre 'mono fill' speaker system.

For ON-STAGE operation (switch pressed) this output becomes AFL interrupted by PFL to drive an engineers WEDGE MONITOR system. The wedge mix is created by pressing the required aux AFL switch combination and adjusting the SEND MASTERS for the desired mix. In this mode the mono output is dimmed by 16dB when TALK is pressed thus avoiding wedge loudspeaker feedback.

Talkback to Aux

Individual pre-select switches and the large momentary TALK switch lets the engineer talk to any combination of the 6 aux mixes using a plug-in gooseneck microphone.

TWO INTO ONE WILL GO

Front-of-House Console

- 4 band 2 sweep channel equaliser with in/out switch
- 6 aux send controls with pre/post fader switching on 1-4 and 5,6
- 4 balanced XLR group outputs with subgrouping to stereo
- Comprehensive master section providing stereo and mono outputs, talkback and an advanced stereo record/replay system

Stage Monitor Console

- Balanced mic and line inputs with wide ranging pre-amplifier and 4-band equaliser
- 6 stage monitor sends with pre/post fader switching on 1-4 and 5,6
- 6 balanced XLR stage monitor outputs with full metering and signal checking
- Comprehensive master section providing engineers wedge output and assignable talkback system

Multimode Operation

- Stereo + mono F.O.H. console with 4 full feature stage monitor sends and 2 effects sends

Other Features

- Easily expandable in blocks of 8 channels
- 4 stereo return inputs with separate left and right connectors and full routing
- Signal present and 3-point peak indicators on all channel inputs
- Mute switches, PFL checking and peak indicators on group and L-R outputs
- Inserts on channel inputs, groups and L-R outputs
- Electronically balanced channel inputs and group L-R and mono outputs
- BNC lamp connector
- Safety mains earthing of chassis
- Rugged yet stylishly compact all metal construction and quality components ensure continued reliability

ALLEN & HEATH

GL3 ALLEN & HEATH
IVE CONSOLE

FREEDOM OF CHOICE

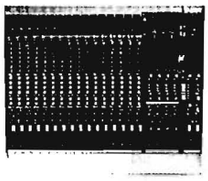

GL3-416
16-4-2-1 (16-6)
W 30.1" (765mm)
D 25.8" (657mm)
H 4.9" (125mm)
weight 43lbs (19.5kg)
packed 68lbs (31kg)

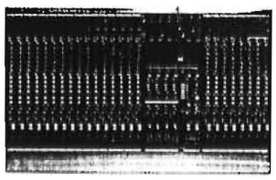

GL3-424
24-4-2-1 (24-6)
W 40.7" (1035mm)
D 25.8" (657mm)
H 4.9" (125mm)
weight 60lbs (27kg)
packed 90lbs (41kg)

GL3-X4
8 channel expander
W 10.6" (270mm)
D 25.8" (657mm)
H 4.9" (125mm)
weight 17lbs (7.5kg)
packed 24lbs (11kg)

MPS9G
External power supply
W 3.9" (100mm)
D 11.8" (300mm)
H 4.3" (110mm)
weight 8lbs (3.5kg)

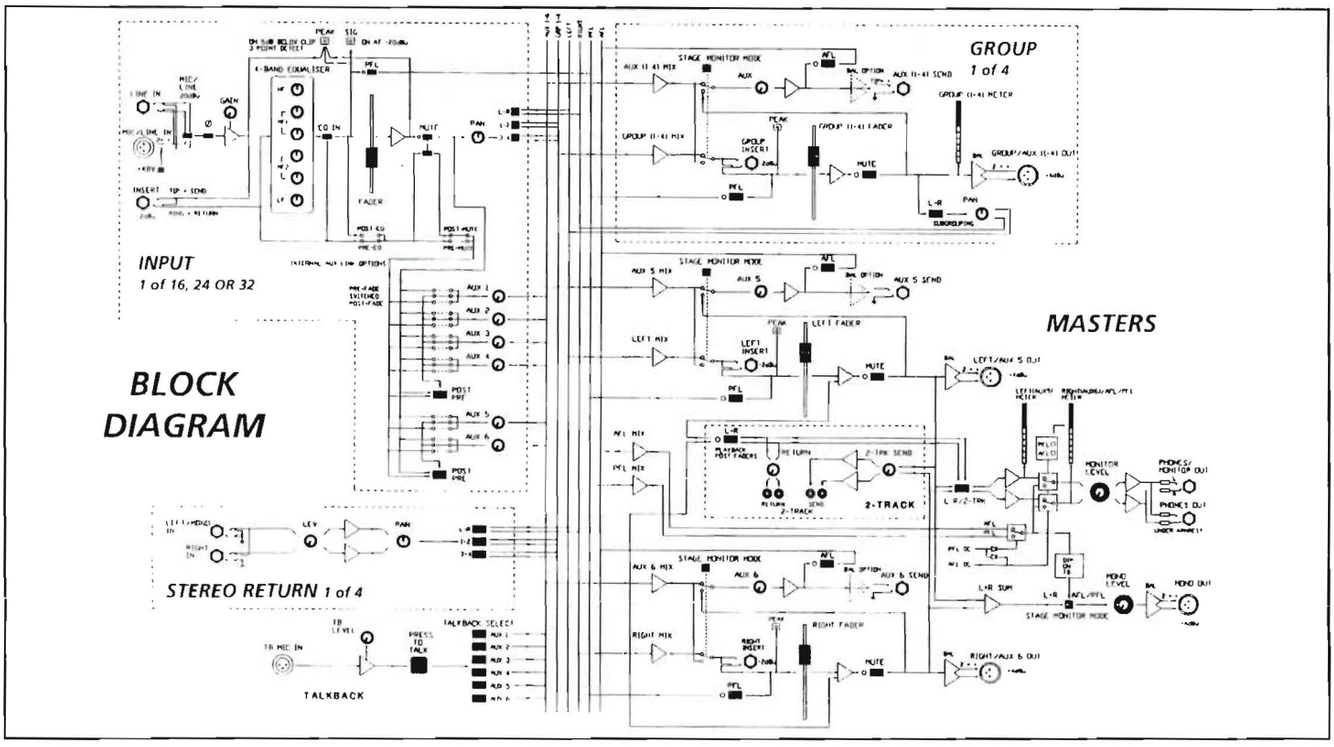

SPECIFICATIONS:

0dBu = 0.775 Volts RMS 0 dBV = 1 Volt RMS
INTERNAL OPERATING LEVEL: -2dBu
INTERNAL HEADROOM: +23dB
MAX OUTPUTS: balanced +27dBu into 600 ohms
unbalanced +21 dBu into 2kohms
METERS: peak responding bargraph 0VU = +4dBu
PEAK LEDs: on 5dB before clipping
SIG LEDs: dynamic responding, on at -20dBu

FREQUENCY RESPONSE: 20Hz TO 20kHz +0/-1 dB
DISTORTION: THD 0.015% Line in to mix out at 1kHz
CROSSTALK: output mute better than 100dB at 1kHz
channel mute better than 75 dB
L-R separation better than 65 dB
NOISE: 22Hz to 22kHz
MIC EIN -128 dB into 150 ohms
LINE pre-amp at 0dB -88 dBu
MIX noise (16 routed) -80 dB ref 0VU

CONSTRUCTION: All metal chassis.
Single panel with individual removable circuit assemblies. Removable base.
External power supply.
POWER REQUIREMENTS: 50/60Hz 100W
Mains voltage set for local requirements.
PHANTOM POWER: +48V DC
Individually switched via 6.8 kohms.

INPUTS:

MIC IN	XLR	pin 2 hot, 3 cold	balanced	2 kohms	variable	-70 to -10 dBu
LINE IN	XLR	pin 2 hot, 3 cold	balanced	10 kohms	variable	-50 to +10 dBu
or	1/4" JACK	tip hot, ring cold	balanced	10 kohms	variable	-50 to +10 dBu
STEREO RETURN	1/4" JACK	tip hot, ring gnd	unbalanced	10 kohms	variable	-10 dBV min
2-TRACK RETURN	RCA PHONO		unbalanced	>6 kohms	variable	-10dBV min
INSERT RETURN	1/4" Jack	tip send, ring ret	unbalanced	>6 kohms	-2dBu	
TALKBACK MIC	XLR	pin 2 hot, 3 gnd	unbalanced	25 kohms	variable	-50 to -4 dBu

OUTPUTS:

L-R out	XLR	pin 2 hot, 3 cold	balanced	50 ohms	+4 dBu	+27 dBu max
MONO OUT	XLR	pin 2 hot, 3 cold	balanced	50 ohms	+4 dBu	+27 dBu max
GROUP OUT	XLR	pin 2 hot, 3 cold	balanced	50 ohms	+4 dBu	+27 dBu max
AUX OUT	1/4" JACK	tip hot, ring gnd	unbalanced	75 ohms	+4 dBu	+21 dBu max
or	option	tip hot, ring cold	balanced	50 ohms	+4 dBu	+27 dBu max
2-TRACK SEND	RCA PHONO		unbalanced	75 ohms	variable	+21 dBu max
INSERT SEND	1/4" JACK	tip send, ring ret	unbalanced	75 ohms	-2 dBu	+21 dBu max
MONITOR OUT	1/4" JACK	tip left, ring right	unbalanced	100 ohms	+4 dBu	+21 dBu max
PHONES OUT	1/4" JACK	tip left, ring right	for stereo headphones 8 to 400 ohms			

DEALER

Manufacturer
Allen & Heath, Kernick Industrial Estate,
Penryn, Cornwall TR10 9LU
Tel. 01326 372070 Fax 01326 377097

A Harman International Company

Printed in England on sustainable forest stock.

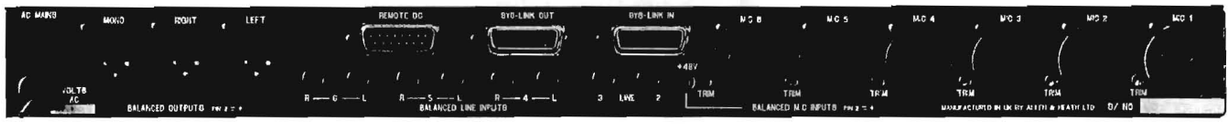

INPUTS

MIC IN	x6	XLR	pin2 +, 3 -	balanced	2kohms	variable -55 to -12dBu
				pad selected	10kohms	variable -35 to +8dBu
Mono Line In	x2	1/4" JACK	tip +, ring -	balanced	10kohms	-10dBV, 0dBu, +4 dBu
Stereo line In	x3	1/4" JACK	tip +, ring -	balanced	10kohms	-10dBV, 0dBu, +4 dBu
Aux In (SYS-LINK)		15 way D female		unbalanced	50ohms	-2dBu
L, R, M In (SYS-LINK)		15 way D female		unbalanced	50ohms	-2dBu
Alarm & DC In (SYS-LINK)		15 way D female		unbalanced	50ohms	-2dBu
Remote VCA DC In		15 way D male		0V=max, -9V DC=off		
Backup DC In		15 way D male		max +16V, -16V, +48V DC, min +12V, -12V, +12V DC		

OUTPUTS

PHONES OUT	1/4" JACK	tip L, ring R	for stereo headphones 8 to 400 ohms		
Remote VCA DC ref	15way D male	0V, -9V reference voltage for remote VCA control			
L, R, M Out	XLR	pin2 +, 3 -	balanced	50 ohms	-10dBV, 0dBu, +4 dBu
Direct Out (SYS-LINK)	15 way D female		unbalanced	50ohms	-2dBu
L, R, M Out (SYS-LINK)	15 way D female		unbalanced	50ohms	-2dBu
Alarm & DC Out (SYS-LINK)	15 way D female		unbalanced	50ohms	-2dBu

GR1 *Specifications*

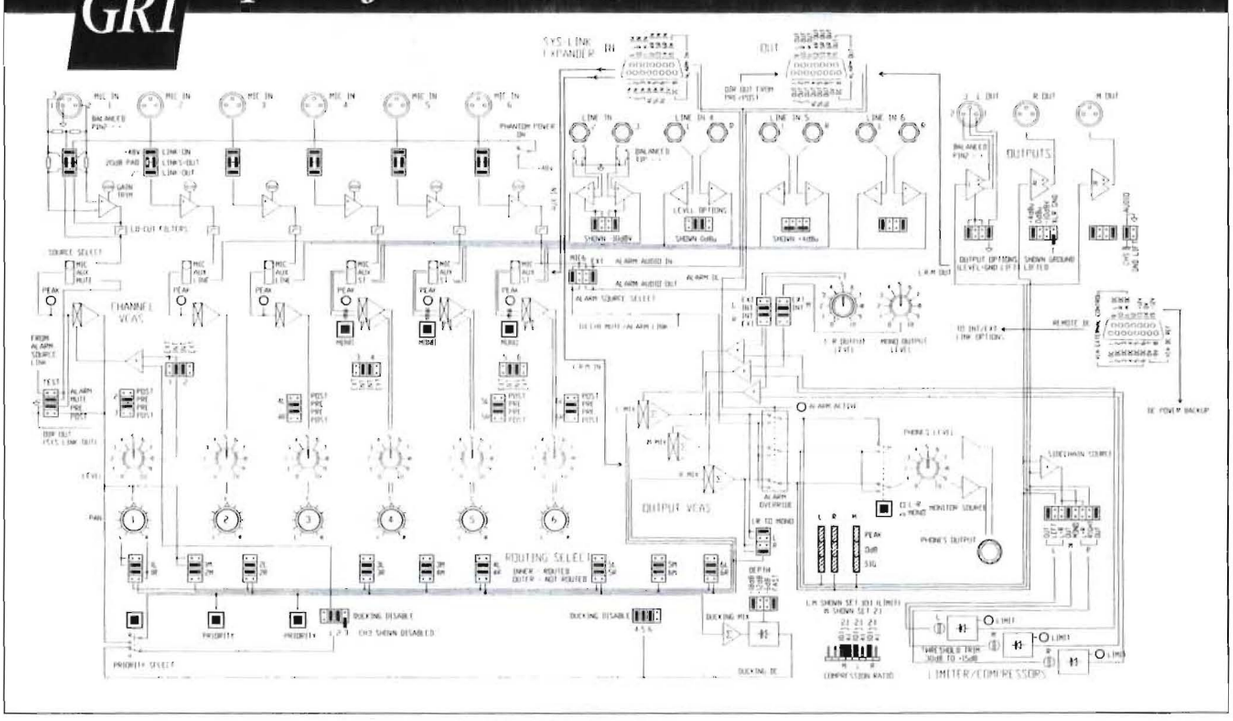

A&H reserve the right to change specifications without notice

Internal Headroom	+23dB
Maximum Output Level	Balanced +26dBu into 600ohms Unbalanced +21dBu into 2kohms
Frequency Response	+/-1dB 20Hz to 30kHz
Distortion	THD better than 0.04%
Crosstalk	Channel shutoff > -90dB at 1kHz Channel pan > -75dB at 1kHz Interchannel > -80dB at 1 kHz
Noise 22Hz -22kHz	MIC EIN -128dB into 150 ohms Line preamp at 0dB gain -90dBu Mix Noise (all routed) > -80dBu
Meters	Individual bargraphs for L, R, M outputs Peak - on 5dB before clipping 0dB Signal - dynamic indication from -20dB
Channel Peak	On 5dB before clipping
Ducking	Depth -6dB, -12dB, or -18dB (Internal link) Release, fast or slow (internal link) Control - from CH1, 2, & 3, PRIORITY switches Individual channel ducking disable (internal links)
Compressor/Limiters	L, R, M individually controlled Ratio 2:1 soft compression (internal links) 4:1 compression
Power Supply	Internally regulated +/-16V +48V DC Phantom Power Global +48V on switch, individual channel links
Power Consumption main Power requirements	25VA max Factory wired for 100, 110, 120, 220, or 240V AC 50/60Hz mains input Fuse T315mA (220-240V AC) T630mA (100-120V AC)
DC Power Backup	External DC power supply or batteries +/-12 to 16V DC at 300mA +12V to +48V DC Phantom Power
Dimensions	Width 482mm (19") Height 44mm (1.75") 1U Depth 262mm (10.3")
Unpacked Weight	4.5kg
Packed Weight	5kg

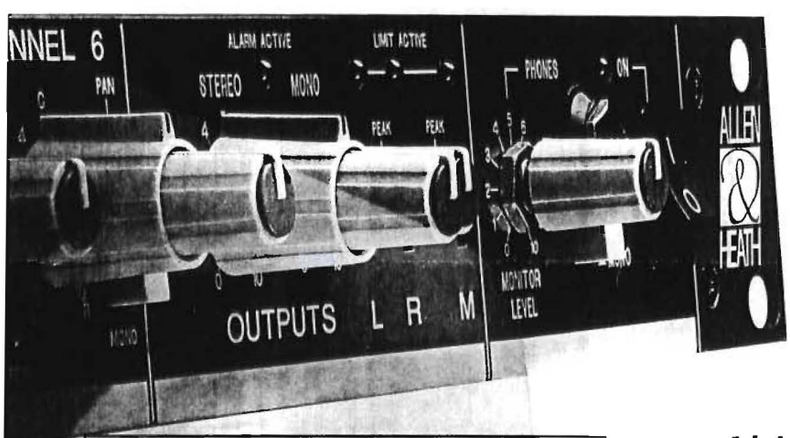

DEALER

ALLEN & HEATH

ALLEN & HEATH, KERNICK INDUSTRIAL ESTATE, PENRYN, CORNWALL, TR10 9LU

Telephone 01326 372070 Fax 01326 377097

A HARMAN INTERNATIONAL COMPANY

Printed in England on Eco-friendly stock

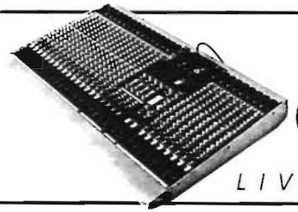

GL3 LIVE CONSOLE — ALLEN & HEATH

FLEXIBLE FRONT-OF-HOUSE AND STAGE MONITOR CONSOLE

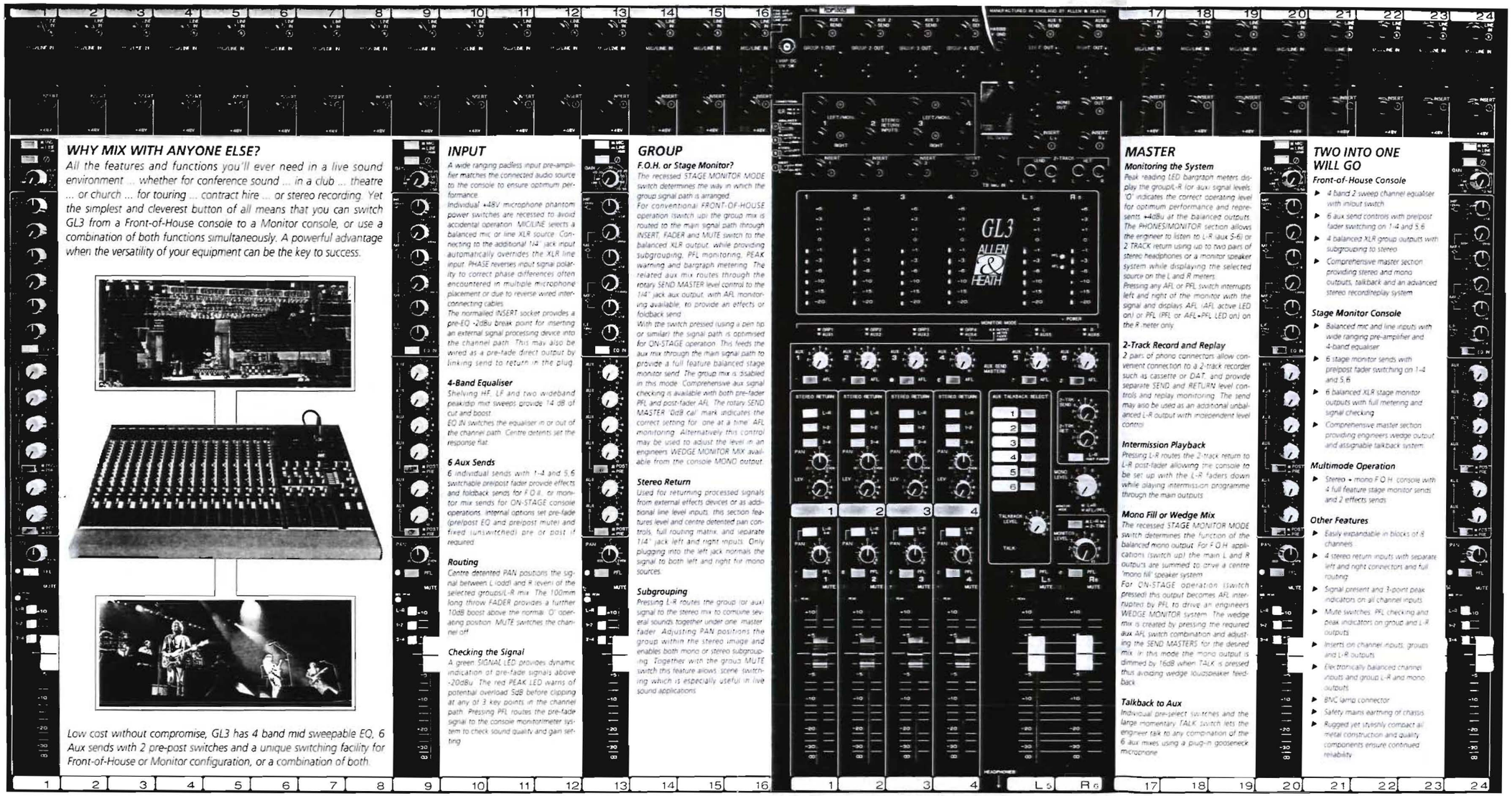

WHY MIX WITH ANYONE ELSE?

All the features and functions you'll ever need in a live sound environment ... whether for conference sound ... in a club ... theatre ... or church ... for touring ... contract hire ... or stereo recording. Yet the simplest and cleverest button of all means that you can switch GL3 from a Front-of-House console to a Monitor console, or use a combination of both functions simultaneously. A powerful advantage when the versatility of your equipment can be the key to success.

Low cost without compromise, GL3 has 4 band mid sweepable EQ, 6 Aux sends with 2 pre-post switches and a unique switching facility for Front-of-House or Monitor configuration, or a combination of both.

INPUT

A wide ranging padless input pre-amplifier matches the connected audio source to the console to ensure optimum performance.

Individual +48V microphone phantom power switches are recessed to avoid accidental operation. MIC/LINE selects a balanced mic or line XLR source. Connecting to the additional 1/4" jack input automatically overrides the XLR line input. PHASE reverses input signal polarity to correct phase differences often encountered in multiple microphone placement or due to reverse wired interconnecting cables.

The normalled INSERT socket provides a pre-EQ -2dBu break point for inserting an external signal processing device into the channel path. This may also be wired as a pre-fade direct output by linking send to return in the plug.

4-Band Equaliser

Shelving HF, LF and two wideband peak/dip mid sweeps provide 14 dB of cut and boost.

EQ IN switches the equaliser in or out of the channel path. Centre detents set the response flat.

6 Aux Sends

6 individual sends with 1-4 and 5,6 switchable pre/post fader provide effects and foldback sends for F.O.H. or monitor mix sends for ON-STAGE console operations. Internal options let pre-fade (pre/post EQ and pre/post mute) and fixed (unswitched) pre or post if required.

Routing

Centre detented PAN positions the signal between L (odd) and R (even) of the selected group/L-R mix. The 100mm long throw FADER provides a further 10dB boost above the normal '0' operating position. MUTE switches the channel off.

Checking the Signal

A green SIGNAL LED provides dynamic indication at pre-fade signals above -20dBu. The red PEAK LED warns of potential overload 5dB before clipping at any of 3 key points in the channel path. Pressing PFL routes the pre-fade signal to the console monitor/meter system to check sound quality and gain setting.

GROUP

F.O.H. or Stage Monitor?

The recessed STAGE MONITOR MODE switch determines the way in which the group signal path is arranged.

For conventional FRONT-OF-HOUSE operation (switch up) the group mix is routed to the main signal path through INSERT, FADER and MUTE switch to the balanced XLR output, while providing subgrouping, PFL monitoring, PEAK warning and bargraph metering. The related aux mix routes through the rotary SEND MASTER level control to the 1/4" jack aux output, with AFL monitoring available, to provide an effects or foldback send.

With the switch pressed (using a pen tip or similar) the signal path is optimised for ON-STAGE operation. This feeds the aux mix through the main signal path to provide a full feature balanced stage monitor send. The group mix is disabled in this mode. Comprehensive aux signal checking is available with both pre-fader PFL and post-fader AFL. The rotary SEND MASTER '0dB cal' mark indicates the correct setting for one at a time AFL monitoring. Alternatively this control may be used to adjust the level in an engineers WEDGE MONITOR MIX available from the console MONO output.

Stereo Return

Used for returning processed signals from external effects devices or as additional line level inputs, this section features level and centre detented pan controls, full routing matrix, and separate 1/4" jack left and right inputs. Only plugging into the left jack normals the signal to both left and right for mono sources.

Subgrouping

Pressing L-R routes the group (or aux) signal to the stereo mix to combine several sounds together under one master fader. Adjusting PAN positions the group within the stereo image and enables both mono or stereo subgrouping. Together with the group MUTE switch this feature allows scene switching which is especially useful in live sound applications.

MASTER

Monitoring the System

Peak reading LED bargraph meters display the group/L-R (or aux) signal levels. '0' indicates the correct operating level for optimum performance and represents +4dBu at the balanced outputs. The PHONES/MONITOR section allows the engineer to listen to L-R (aux 5-6) or 2 TRACK return using up to two pairs of stereo headphones or a monitor speaker system while displaying the selected source on the L and R meters.

Pressing any AFL or PFL switch interrupts left and right of the monitor with the signal and displays AFL (AFL active LED on) or PFL (PFL or AFL+PFL LED on) on the R meter only.

2-Track Record and Replay

2 pairs of phono connectors allow convenient connection to a 2-track recorder such as cassette or DAT, and provide separate SEND and RETURN level controls and replay monitoring. The send may also be used as an additional unbalanced L-R output with independent level control.

Intermission Playback

Pressing L-R routes the 2-track return to L-R post-fader allowing the console to be set up with the L-R faders down while playing intermission programme through the main outputs.

Mono Fill or Wedge Mix

The recessed STAGE MONITOR MODE switch determines the function of the balanced mono output. For F.O.H. applications (switch up) the main L and R outputs are summed to drive a centre 'mono fill' speaker system.

For ON-STAGE operation (switch pressed) this output becomes AFL interrupted by PFL to drive an engineers WEDGE MONITOR system. The wedge mix is created by pressing the required aux AFL switch combination and adjusting the SEND MASTERS for the desired mix. In this mode the mono output is dimmed by 16dB when TALK is pressed thus avoiding wedge loudspeaker feedback.

Talkback to Aux

Individual pre-select switches and the large momentary TALK switch lets the engineer talk to any combination of the 6 aux mixes using a plug-in gooseneck microphone.

TWO INTO ONE WILL GO

Front-of-House Console

- *4 band 2 sweep channel equaliser with in/out switch*
- *6 aux send controls with pre/post fader switching on 1-4 and 5,6*
- *4 balanced XLR group outputs with subgrouping to stereo*
- *Comprehensive master section providing stereo and mono outputs, talkback and an advanced stereo record/replay system*

Stage Monitor Console

- *Balanced mic and line inputs with wide ranging pre-amplifier and 4-band equaliser*
- *6 stage monitor sends with pre/post fader switching on 1-4 and 5,6*
- *6 balanced XLR stage monitor outputs with full metering and signal checking*
- *Comprehensive master section providing engineers wedge output and assignable talkback system*

Multimode Operation

- *Stereo + mono F.O.H. console with 4 full feature stage monitor sends and 2 effects sends*

Other Features

- *Easily expandable in blocks of 8 channels*
- *4 stereo return inputs with separate left and right connectors and full routing*
- *Signal present and 3-point peak indicators on all channel inputs*
- *Mute switches, PFL checking and peak indicators on group and L-R outputs*
- *Inserts on channel inputs, groups and L-R outputs*
- *Electronically balanced channel inputs and group L-R and mono outputs*
- *BNC lamp connector*
- *Safety mains earthing of chassis*
- *Rugged yet stylishly compact all metal construction and quality components ensure continued reliability*

ALLEN & HEATH

SPECIFICATIONS

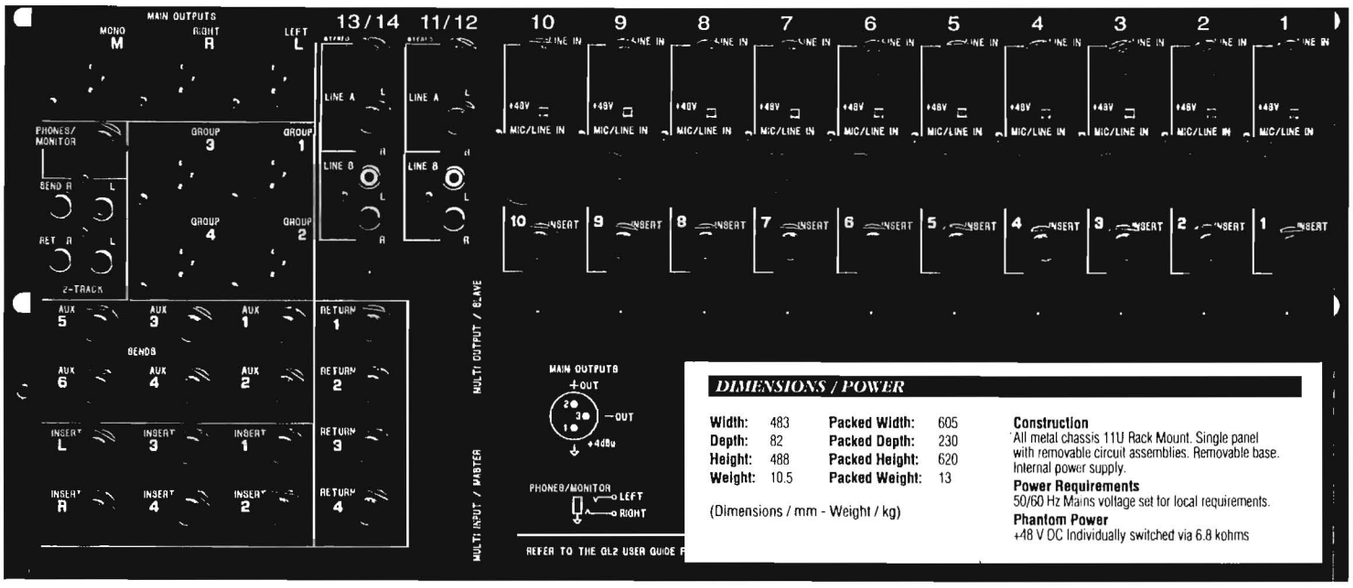

DIMENSIONS / POWER

Width:	483	**Packed Width:**	605
Depth:	82	**Packed Depth:**	230
Height:	488	**Packed Height:**	620
Weight:	10.5	**Packed Weight:**	13

(Dimensions / mm - Weight / kg)

Construction
All metal chassis 11U Rack Mount. Single panel with removable circuit assemblies. Removable base. Internal power supply.

Power Requirements
50/60 Hz Mains voltage set for local requirements.

Phantom Power
+48 V DC Individually switched via 6.8 kohms

KEYPOINTS

Internal Operating Level -2 dBu

Internal Headroom +23 dB

Maximum Outputs
bal +27 dBu into 600 ohms
unbal +21 dBu into 2 kohms

Meters
Peak responding bargraph
0VU = +4 dBu

Peak LEDs
On 5 dBu before clipping

Signal Present LEDs
Dynamic response,
On @ -20 dBu

Frequency Response
20 Hz to 20 kHz +0/-1 dB

Distortion
THD 0.01% Line into mix out @ 1 kHz

Crosstalk
Output mute better than 100 dB @ 1 kHz
Channel mute better than 90 dB @ 1 kHz

Noise
22 Hz to 22 kHz MIC EIN -128 dB into 150 ohms
LINE pre-amp @ 0 dB -88 dBu MIX noise -85 dB

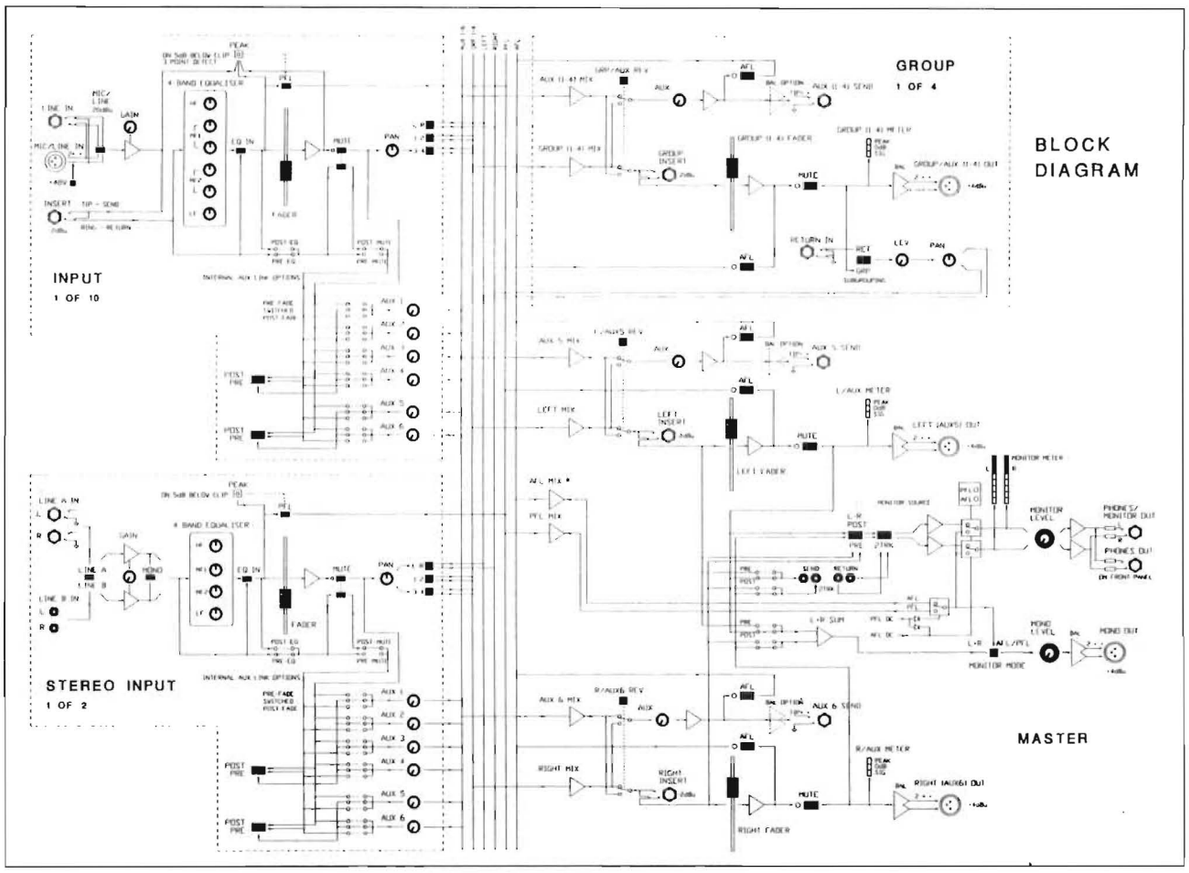

OUTPUTS

L-R Out	XLR	pin 2 hot, 3 cold	bal	50 ohms	+4 dBu +27 dBu max
Mono Out	XLR	pin 2 hot, 3 cold	bal	50 ohms	+4 dBu +27 dBu max
Group Out	XLR	pin 2 hot, 3 cold	bal	50 ohms	+4 dBu +27 dBu max
Aux Out	1/4" Jack	tip hot, ring gnd	unbal	75 ohms	+1 dBu +21 dBu max
or option:		tip hot, ring cold	bal	50 ohms	+4 dBu +27 dBu max
2-Track Send	RCA Phono			unbal	75 ohms -10 dBV
Insert Send	1/4" Jack	tip SEND, ring set	unbal	75 ohms	-2 dBu +21 dBu max
Monitor Out	1/4" Jack	tip left, ring right	unbal	100 ohms	+4 dBu +21 dBu max
Phones Out	1/4" Jack	tip left, ring right for stereo headphones 8 to 400 ohms			

INPUTS

Mic In	XLR pin 2 hot, 3 cold	bal	2 kohms	variable -60 to -10 dBu
Line In	XLR pin 2 hot, 3 cold	bal	10 kohms	variable -40 to +10 dBu
	1/4" Jack tip hot, ring gnd	unbal	10 kohms	variable -40 to +10 dBu
FX Return	1/4" Jack tip hot, ring gnd	unbal	10 kohms	variable -10 dBV min
2-Track Return	RCA Phono	unbal	>>8 kohms	-10 dBV
Insert Return	1/4" Jack tip send, ring rtn	bal	>>5 kohms	-2 dBu

ALLEN & HEATH

Manufacturer

Allen & Heath, Kernick Industrial Estate,
Penryn, Cornwall TR10 9LU

Tel: 01326 372070 Fax: 01326 377097

A Harman International Company.

Designed and produced by Barrie James West Associates Limited AH 372M100493 Printed in England on an Eco Friendly Paper