ing Kingston, empties its waters into the Hudson at Saugerties, ten miles north of Kingston. A high fence of palisades, with here and there a gate, had previously been constructed around the place. On the west side of the settlement there was a gate known as the mill-gate and a gradual descent to the valley, through which ran a brook on which a grist-mill was seated. Southeast of the village, near the mouth of Rondout Creek, was a small fortification or redoubt, from which this stream derived its corrupted name. The wide prospect of rich alluvial flats and of higher stretches of

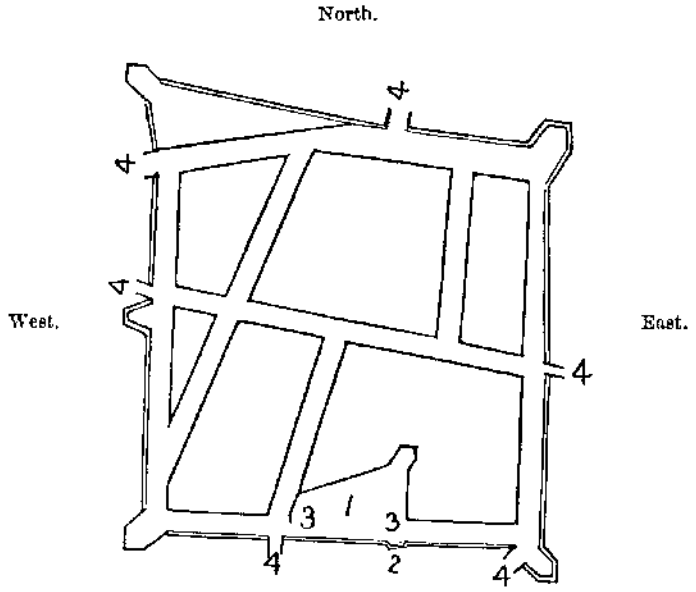

PLAN OF WILTWIJCK, 1661.

The outer lines represent the stockade.

1. The fort.
2. Block-house.
3. Gates of the fort.
4. Outer gates.

fertile undulating farming land surrounding the village is picturesquely featured by the bold ranges of the Catskill Mountains in Greene County and the lower spurs of the Shawangunk Mountains westward. Upon the small collection of rudely built dwellings, mostly thatched with reeds or straw, with stone chimneys outside them, Director-General Stuyvesant bestowed the name of Wiltwijck.

Before his return to New Amsterdam, on May 5, he appointed Evert Pels, Cornelis Barentsen Sleight, and Albert Heymansen Roose *schepens*, to administer the laws of the province as recited in the instructions formulated for the officers of the Court of Wiltwijck. This court, consisting of the sheriff and the three magistrates, was empowered to hear, examine, and determine